CAMP LEJEUNE
NORTH CAROLINA
KNOX LANDING
PHASE THREE
50 NEW SNCO HOMES AT CAMP LEJEUNE

100% SUBMITTAL FEBRUARY 08, 2011

BASED UPON COMPLIANCE WITH THE GSOW AND APPLICABLE CODES, APPROVED FOR CONSTRUCTION.
Project: Knox Landing Phase III
By:
Government Services Integrated Process Team LLC
Date: 3/7/2011

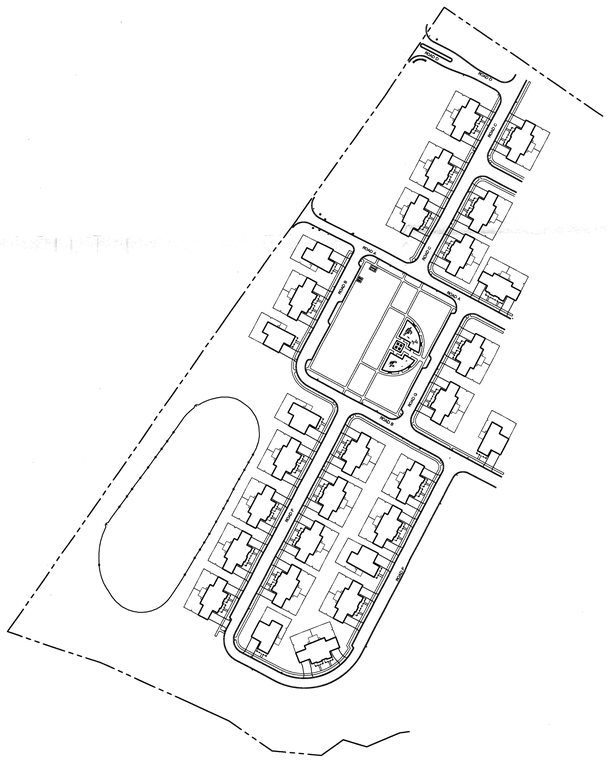

GARRISON GROUP ARCHITECTS, INC.
12 EDUCATION WAY
DOVER, NH 03820
603 953 3912
www.ggarcinc.com

Atlantic COMMUNITIES
Marine Corps
A Lend Lease Community

THE DEPARTMENT OF THE NAVY
IN PARTNERSHIP WITH:

ACTUS LEND LEASE LLC
1801 WEST END AVENUE, SUITE 1700
NASHVILLE, TN 37203
PH: (615) 324-8800
FX: (615) 963-2701
WWW.ACTUSLENDLEASE.COM

Actus
Lend Lease

ABBREVIATIONS

AB	ANCHOR BOLT
ABV	ABOVE
ABR	AIR BARRIER
ADH	ADHESIVE
ADJ	ADJUSTABLE
AFF	ABOVE FLOOR FINISH
AGG	AGGREGATE
AHR	ANCHOR, ANCHORAGE
ALT	ALTERNATE
ALUM	ALUMINUM
ANOD	ANODIZED
AP	ACCESS PANEL
APPROX	APPROXIMATE
ARCH	ARCHITECT(URAL)
ASPH	ASPHALT
AUTO	AUTOMATIC
BD	BOARD
BEL	BELOW
BET	BETWEEN
BEY	BEYOND
BIT	BITUMINOUS
BKSPL	BACKSPLASH
BLDG	BUILDING
BLK	BLOCK
BLKG	BLOCKING
BOT	BOTTOM
BPL	BEARING PLATE
BR	BEDROOM
BRCG	BRACING
BRG	BEARING
BRK	BRICK
BRZ	BRONZE
BS	BOTH SIDES
BT	BUILDING TYPE
BVL	BEVELED
BW	BOTH WAYS
C	CHANNEL
CAB	CABINET
CAP	CAPACITY
CEM	CEMENT
CER	CERAMIC
CIPC	CAST-IN-PLACE CONCRETE
CJ	CONTROL JOINT
CK	CAULK(ING)
CLG	CEILING
CL	CLOSET
CLOS	CLOSURE
CLR	CLEAR(ANCE)
CNTR	COUNTER
CONC	CONCRETE
CONST	CONSTRUCTION
CONT	CONTINUOUS OR CONTINUE
CPT	CARPET(ED) (ING)
CSK	COUNTERSINK(SUNK)
CSMT	CASEMENT
CT	CERAMIC TILE
DBL	DOUBLE
DEMO	DEMOLISH, DEMOLITION
DET	DETAIL
DIA	DIAMETER
DIAG	DIAGONAL
DIM	DIMENSION
DN	DOWN
DR	DOOR
DS	DOWNSPOUT
DWG	DRAWING(S)
E	EAST
EA	EACH
EL	ELEVATION (FROM BENCHMARK)
ELEC	ELECTRICAL
EMER	EMERGENCY
ENCL	ENCLOSE(URE)
EQ	EQUAL OR EQUIVALENT
EQUIP	EQUIPMENT
EXH	EXHAUST
EXG	EXISTING
EXP	EXPOSED OR EXPANSION
EXT	EXTERIOR
F	FACE
FBO	FURNISHED BY OTHERS
FD	FLOOR DRAIN
FF	FINISH FACE
FIN	FINISH(ED)
FL	FLOOR
FLEX	FLEXIBLE
FLG	FLASHING
FND	FOUNDATION
FOC	FACE OF CONCRETE
FOS	FACE OF STUD
FPRF	FIREPROOFING
FR	FRAME(D) (ING)
FT	FEET OR FOOTING
FURR	FURRED(ING)
GA	GAGE, GAUGE
GALV	GALVANIZED
GL	GLASS
GLZ	GLAZING
GR	GRADE
GT	GROUT
GYP	GYPSUM
GYP BD	GYPSUM BOARD
H	HIGH
HD	HAND OR HEAD
HDBD	HARDBOARD
HDR	HEADER
HDW	HARDWARE
HM	HOLLOW METAL
HOR	HORIZONTAL
HT	HEIGHT
HWD	HARDWOOD
IN	INCHES
INCL	INCLUDE(D) (ING)
INS	INSULATE(D) (ING)
INT	INTERIOR
JF	JOINT FILLER
JMB	JAMB
JST	JOIST
JT	JOINT
KIT	KITCHEN
KO	KNOCKOUT
L	LENGTH
LAM	LAMINATE(D)
LAV	LAVATORY
LBL	LABEL
LG	LONG
LH	LEFT-HAND
LL	LIVE LOAD
LOC	LOCATION
MAX	MAXIMUM
MBR	MASTER BEDROOM
MC	MEDICINE CABINET
MDF	MEDIUM DENSITY FIBERBOARD
MECH	MECHANICAL
MEMB	MEMBRANE
MET	METAL
MFR	MANUFACTURE(ER)
MIN	MINIMUM
MIR	MIRROR
MISC	MISCELLANEOUS
MR	MOISTURE RESISTANT
MT	METAL THRESHOLD
MTD	MOUNTED
MTG	MOUNTING
MTL	METAL OR MATERIAL
MULL	MULLION
N	NORTH
NA	NOT APPLICABLE
NAT	NATURAL
NIC	NOT IN CONTRACT
NR	NOT REQUIRED
NRC	NOISE REDUCTION COEFFICIENT
NTS	NOT TO SCALE
OA	OVERALL
OC	ON CENTER
OD	OUTSIDE DIAMETER
OH	OVERHEAD
O.H.	OPPOSITE HAND
OPNG	OPENING
OPP	OPPOSITE
PAR	PARALLEL
PBD	PARTICLEBOARD
PED	PEDESTAL
PL	PROPERTY LINE
PLAM	PLASTIC LAMINATE
PLAS	PLASTER
PNL	PANEL
PRES	PRESSURE
PT	PRESSURE TREATED
PTN	PARTITION
PVC	POLYVINYL CHLORIDE
PVG	PAVING
PVMT	PAVEMENT
PWD	PLYWOOD
R	RISER
RAD	RADIUS
RB	RESILIENT BASE
RBT	RABBET
RD	ROOF DRAIN
REBAR	REINFORCING BARS
REC	RECESSED
REF	REFERENCE
REINF	REINFORCED (ING)
REQD	REQUIRED
RESIL	RESILIENT
REV	REVISION(S), REVISED
RH	RIGHT-HAND
RLG	RAIL(ING)
RM	ROOM
RO	ROUGH OPENING
RVL	REVEAL
RVS	REVERSE (SIDE)
S	SOUTH OR SILL
SCH	SCHEDULE
SECT	SECTION
SH	SHELF(VES)(ING)
SHT	SHEET
SHTHG	SHEATHING
SIM	SIMILAR
SL	SLID(E) (ING)
SLV	SLEEVE
SNT	SEALANT
SPC	SPACER
SPEC	SPECIFICATION
SPRT	SUPPORT
SQ	SQUARE
SS	STAINLESS STEEL
STC	SOUND TRANSMISSION COEFICIENT
STD	STANDARD
STL	STEEL
STR	STRAIGHT
STRUC	STRUCTURAL
SUSP	SUSPENDED
SYM	SYMMETRY(ICAL)
SYS	SYSTEM
T	TREAD
TB	TOWEL BAR
T&B	TOP AND BOTTOM
T&G	TONGUE AND GROOVE
TEMP	TEMPER(ED)
THK	THICK(NESS)
TOP	TOP OF PLATE
TOL	TOLERANCE
TOS	TOP OF STEEL
TOW	TOP OF WALL
TR	TRANSOM
TS	TOP OF SLAB
TYP	TYPICAL
UC	UNDERCOUNTER
US	UNDERSIDE
UON	UNLESS OTHERWISE NOTED
VAL	VALANCE
VARN	VARNISH
VB	VAPOR BARRIER
VCT	VINYL COMPOSITION TILE
VERT	VERTICAL
VEST	VESTIBULE
VIF	VERIFY IN FIELD
VNL	VINYL
VNR	VENEER
W	WEST
W/	WITH
W/O	WITHOUT
W/W	WALL TO WALL
WB	WOOD BASE
WD	WOOD OR WIDTH OR WIDE
WL	WALL
WM	WIRE MESH
WP	WATERPROOFING OR WORKING POINT
WS	WATERSTOP
WWF	WELDED WIRE FABRIC

AND	&
ANGLE	L
AT	@
CENTERLINE	℄
DEGREE(S)	°
DIAMETER	⌀
NUMBER	#N
POUND	N#
PLUS OR MINUS	±
PLATE	PL

GENERAL INFORMATION

CAMP LEJEUNE

APPLICABLE CODES & SYSTEM STANDARDS

-NORTH CAROLINA ENERGY CODE - 2006

-NORTH CAROLINA MECHANICAL CODE - 2006

-NORTH CAROLINA PLUMBING CODE - 2006

-NORTH CAROLINA ELECTRICAL CODE - NEC 2005

-ASHRAE 62-2001 VENTILATION FOR ACCEPTABLE INDOOR AIR QUALITY

-ILLUMINATING ENGINEERING SOCIETY (IES) LIGHTING HANDBOOK

-NORTH CAROLINA RESIDENTIAL CODE FOR ONE AND TWO FAMILY DWELLINGS 2006

-UNIFORM FEDERAL ACCESSIBILITY STANDARDS (UFAS)

-ENERGY STAR 2.0 QUALIFICATION AND PERFORMANCE RATINGS

-EPA'S MODEL STANDARDS AND TECHNIQUES FOR CONTROL OF RADON IN RESIDENTIAL BUILDINGS

BUILDING CONSTRUCTION CLASSIFICATION

OCCUPANCY HAZARD:	LIGHT CLASS (NFPA - 1257)
OCCUPANCY TYPE:	RESIDENTIAL (R-3)
OCCUPANCY SUB-TYPE:	ONE & TWO-DWELLINGS
CONSTRUCTION CLASS:	COMBUSTIBLE/UNPROTECTED (5B)
FIRE RESISTIVE INDEX:	000 (EXT.WALLS, STRUCTURE, FLOORS)
DWELLING UNIT SEPARATION:	1-HR FIRE RATED ASSEMBLY

PROJECT ENVELOPE DATA

LOCATION:	CAMP LEJEUNE - KNOX LANDING STATION ONSLOW COUNTY, NORTH CAROLINA, USA (LAT - 34.7°N - LON - 77.4°W)
CLIMATE ZONE:	6b (2,500-2,999 HDD) (IRC)
THERMAL CRITERIA:	2,901 DD LANTNAVFACENGCOM A & E GUIDE
INSULATION REQUIRED:	R-19 EXTERIOR WALLS R-30 CEILINGS (ROOF) R-11 INTERIOR INSULATED WALLS

SQUARE FOOTAGE CALCULATIONS

SQUARE FOOTAGE- METHOD FOR CALCULATING:
ANSI Z765-2003

FINISHED SQUARE FOOTAGE CALCULATIONS FOR THESE HOUSES WERE BASED ON PLAN DIMENSIONS AND MAY VARY FROM THE FINISHED SQUARE FOOTAGE OF THE HOUSES AS BUILT

OTHER SQUARE FOOTAGE CALCULATIONS ARE NOT BASED ON ANSI Z765-2003

SQUARE FOOTAGE NUMBERS ARE NOT INTENDED TO BE USED FOR TAKE OFF CALCULATIONS

DRAWING INDEX

SEQUENCE #		TITLE SERIES	REVISED BY BULLETIN #
1 OF 72	G0.01	COVER SHEET	
2 OF 72	G0.02	PROJECT DATA	1
		ARCHITECTURAL	
3 OF 72	AS1.01	OVERALL UNIT MATRIX	
4 OF 72	AS4.01	SITE PLAN FOR BUILDING MATRIX	
5 OF 72	AS4.02	SITE PLAN FOR BUILDING MATRIX	
6 OF 72	AS5.01	UTILITY POINTS OF CONNECTION PLAN	
7 OF 72	A1.01	BUILDING TYPE 401 - LOWER LEVEL PLAN	
8 OF 72	A1.02	BUILDING TYPE 401 - UPPER LEVEL PLAN	1
9 OF 72	A1.03	BUILDING TYPE 402 - LOWER LEVEL PLAN	1
10 OF 72	A1.04	BUILDING TYPE 401 - ROOF PLAN	
11 OF 72	A1.05	BUILDING TYPE 402 - ROOF PLAN	
12 OF 72	A2.01	BUILDING TYPE 401a - EXTERIOR ELEVATIONS	
13 OF 72	A2.02	BUILDING TYPE 401b - EXTERIOR ELEVATIONS	
14 OF 72	A2.03	BUILDING TYPE 401c - EXTERIOR ELEVATIONS	
15 OF 72	A2.04	BUILDING TYPE 402 - EXTERIOR ELEVATIONS	
16 OF 72	A3.01	BUILDING TYPE 401 - BUILDING SECTIONS	
17 OF 72	A3.02	BUILDING TYPE 402 - BUILDING SECTIONS	
18 OF 72	A4.01	WALL SECTIONS	
19 OF 72	A4.02	WALL SECTIONS	
20 OF 72	A4.03	WALL SECTIONS	
21 OF 72	A4.04	STAIR SECTIONS	
22 OF 72	A5.01	ROOF DETAILS	
23 OF 72	A5.02	EXTERIOR DETAILS	
24 OF 72	A5.03	SCREEN PORCH DETAILS	
25 OF 72	A5.04	TYPICAL WINDOW AND DOOR DETAILS	
26 OF 72	A5.05	EXTERIOR DETAILS	
27 OF 72	A5.06	FIRE PROTECTION DETAILS	1
28 OF 72	A5.07	INTERIOR DETAILS	1
29 OF 72	A6.01	SCHEDULES	
30 OF 72	A7.01	INTERIOR ELEVATIONS	
31 OF 72	A7.02	INTERIOR ELEVATIONS	
		STRUCTURAL	
32 OF 72	S0.01	GENERAL NOTES	
33 OF 72	S1.01	FOUNDATION PLAN BUILDING TYPE 401a	
34 OF 72	S1.02	FOUNDATION PLAN BUILDING TYPE 401b	
35 OF 72	S1.03	FOUNDATION PLAN BUILDING TYPE 401c	
36 OF 72	S1.04	FOUNDATION PLAN BUILDING TYPE 402	
37 OF 72	S1.05	2ND FLOOR & LOW ROOF FRAMING PLAN BUILDING TYPE 401a	
38 OF 72	S1.06	UPPER ROOF FRAMING PLAN BUILDING TYPE 401a	
39 OF 72	S1.07	2ND FLOOR & LOW ROOF FRAMING PLAN BUILDING TYPE 401b	
40 OF 72	S1.08	UPPER ROOF FRAMING PLAN BUILDING TYPE 401b	
41 OF 72	S1.09	2ND FLOOR & LOW ROOF FRAMING PLAN BUILDING TYPE 401c	
42 OF 72	S1.10	UPPER ROOF FRAMING PLAN BUILDING TYPE 401c	
43 OF 72	S1.11	ROOF FRAMING PLAN BUILDING TYPE 402	
44 OF 72	S2.01	SHEAR WALL ELEVATIONS BUILDING TYPE 401	
45 OF 72	S2.02	SHEAR WALL ELEVATIONS BUILDING TYPE 402	
46 OF 72	S5.01	TYPICAL DETAILS	
47 OF 72	S5.02	TYPICAL DETAILS	1
48 OF 72	S5.03	STRUCTURAL DETAILS	
49 OF 72	S5.04	STRUCTURAL DETAILS	
50 OF 72	S5.05	STRUCTURAL DETAILS	
51 OF 72	S5.06	STRUCTURAL DETAILS	
52 OF 72	S6.01	FRAMING SCHEDULES	

SEQUENCE #		TITLE SERIES	REVISED BY BULLETIN #
		PLUMBING	
53 OF 72	P0.01	LEGENDS AND NOTES	
54 OF 72	P1.01	BUILDING TYPE 401 LOWER LEVEL PLUMBING PLANS	
55 OF 72	P1.02	BUILDING TYPE 401 UPPER LEVEL PLUMBING PLANS	
56 OF 72	P1.03	BUILDING TYPE 402 PLUMBING FLOOR PLANS	
57 OF 72	P2.01	BUILDING TYPE 401 PLUMBING RISER DIAGRAMS	
58 OF 72	P2.02	BUILDING TYPE 402 PLUMBING RISER DIAGRAMS	
59 OF 72	P5.01	SCHEDULES AND DETAILS	
		MECHANICAL	
60 OF 72	M0.01	MECHANICAL LEGEND AND NOTES	
61 OF 72	M1.01	BUILDING TYPE 401 LOWER LEVEL DUCTWORK PLAN	
62 OF 72	M1.02	BUILDING TYPE 401 UPPER LEVEL DUCTWORK PLAN	
63 OF 72	M1.03	BUILDING TYPE 402 DUCTWORK FLOOR PLAN	
64 OF 72	M2.01	MECHANICAL ROOM SECTIONS	
65 OF 72	M5.01	MECHANICAL DETAILS	
66 OF 72	M6.01	MECHANICAL SCHEDULES	
		ELECTRICAL	
67 OF 72	E0.01	LEGEND, LIGHTING FIXTURE SCHEDULE & GENERAL NOTES	1
68 OF 72	E1.01	BT 401 LOWER LEVEL ELECTRICAL PLAN	1
69 OF 72	E1.02	BT 401 UPPER LEVEL ELECTRICAL PLAN	
70 OF 72	E1.03	BT 402 ELECTRICAL PLAN	1
71 OF 72	E2.0	ELECTRICAL RISER DIAGRAMS	
72 OF 72	E3.0	SCHEDULES AND DETAILS	

PROJECT TEAM

DESIGN/BUILD CONTRACTOR
ACTUS LEND LEASE
1801 WEST END AVENUE, SUITE 1700
NASHVILLE, TN 37203
PH: (615) 324-8800
FX: (615) 963-2701
WWW.ACTUSLENDLEASE.COM

LAND PLANNING & URBAN DESIGN
E D S A
400 E. PRATT STREET
INNER HARBOR CENTER
SUITE 902
BALTIMORE, MD 21202
PH: (443) 539-3350
FX: (443) 539-3351
WWW.EDSAPLAN.COM

CIVIL ENGINEEERING
LITTLEJOHN ENGINEERING ASSOCIATES
1935 TWENTY-FIRST AVENUE SOUTH
NASVILLE, TN 37212
PH: (615) 385-4144
FX: (615) 385-4020
WWW.LEAINC.COM

ARCHITECTURE
GARRISON GROUP ARCHITECTS INC.
12 EDUCATION WAY
DOVER, NH 03820
PH: (603) 953-3912
WWW.GGARCINC.COM

STRUCTURAL ENGINEERING
COURT STREET ENGINEERING, P.C.
1008 HARRISON STREET
LYNCHBURG, VA 24504
PH: (434) 846-3669
FX: (434) 846-4230
WWW.COURTSTREETENG.COM

MECHANICAL & PLUMBING ENGINEERING
PERRIN ENGINEERING
77 DOWNEY STREET
HOPKINTON MA, 01748
PH: 508-497-5033
FX: 774-759-3084

ELECTRICAL ENGINEERING
M.J. SUPRANOVICZ ASSOCIATES
29 DANDY ROAD
SAGAMORE BEACH, MA 02562
PH: 508-833-7559

Atlantic COMMUNITIES
Marine Corps
A Lend Lease Community

INCIDENT & INJURY FREE
SIN LESIÓN O ACCIDENTE

Actus Lend Lease

Actus Lend Lease

EDSA

GARRISON GROUP ARCHITECTS INC.

Court Street Engineering

Perrin Engineering

M.J. SUPRANOVICZ ASSOCIATES
CONSULTING ELECTRICAL ENGINEERS

Date:	Issue:
2/8/2011	100% SUBMITTAL
5/12/2011	BULLETIN NO. 1

GARRISON GROUP ARCHITECTS, INC.
12 EDUCATION WAY
DOVER, NH 03820
603.953.3912
www.ggarcinc.com

CHRISTINE E CASTALDO
REGISTERED ARCHITECT
11975
NORTH CAROLINA
CHARLOTTE, NC

PHASE 3
50 NEW HOMES AT KNOX LANDING
CAMP LEJEUNE NORTH CAROLINA

PROJECT DATA

Project No:	10-003
Drawn:	CC
Checked:	MA
Approved:	CC
*Scale:	AS NOTED

*use graphic scales if sheet size varies from 22 x 34

SHEET 2 OF 72

G0.02

C:\Projects\Actus\KP50SNCO\KP50SNCO\Sheets\G0.02 PROJECT DATA.dwg May 18, 2011 - 9:40am

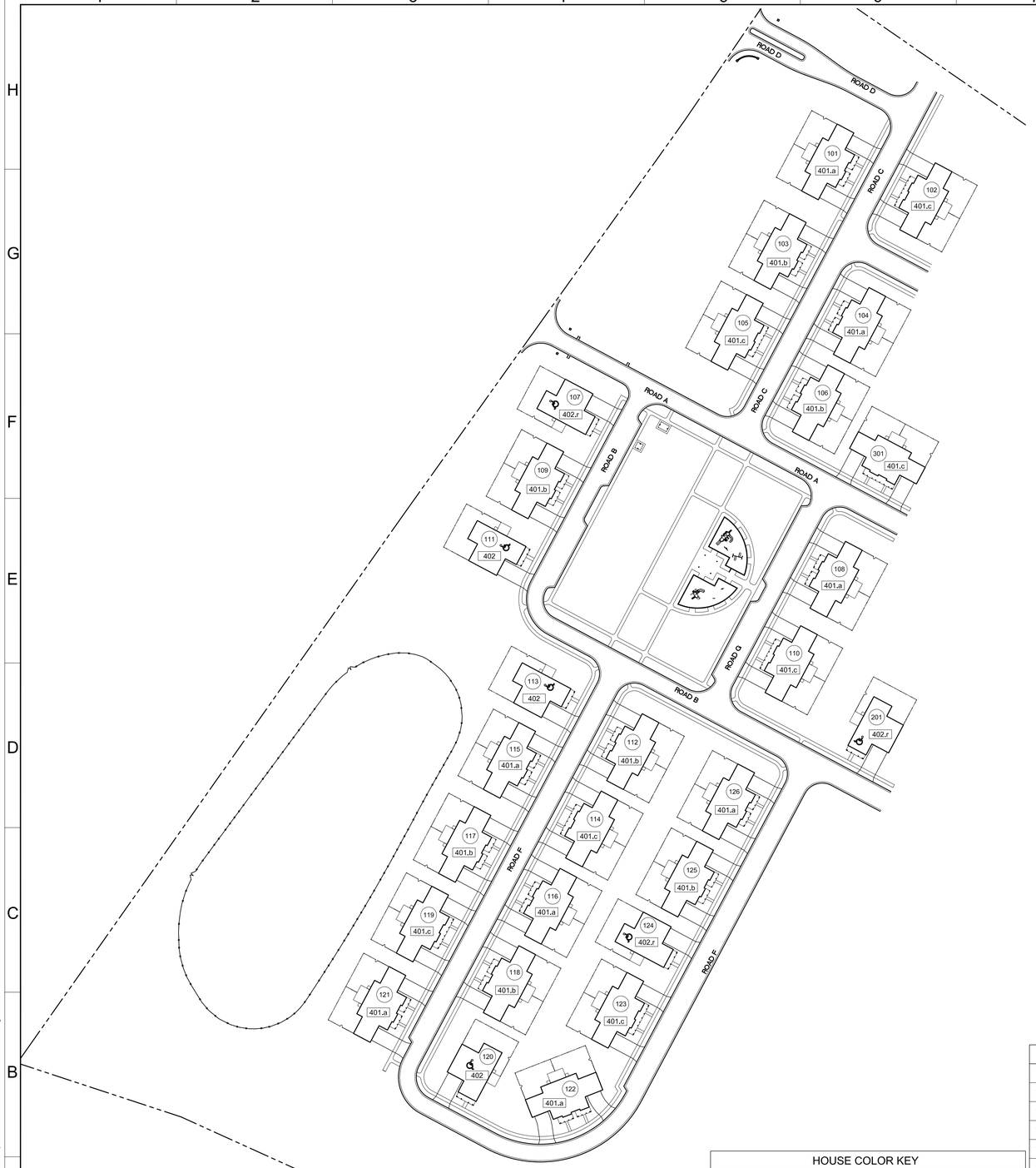

1 **SITE PLAN**
1" = 80'

OVERALL UNIT MATRIX

BUILDING MIX			UNIT MIX					
BUILDING COMPOSITION (r) REVERSED IMAGE UNIT	LOT NUMBERS	BUILDING TYPES (r) = REVERSED IMAGE	# OF BT		S4A	S4B	BT402	TTL
BT 401a S4A S4B	101, 104, 108, 115, 116, 121, 122, 126	401a	8		8	8		16
BT 401b S4A S4B	103, 106, 109, 112, 117, 118, 125	401b	7		7	7		14
BT 401c S4A S4B	102, 105, 110, 114, 119, 123, 301	401c	7		7	7		14
BT 402	111, 113, 120	402	3				3	3
	107, 124, 201	402.r	3				3	3
TOTAL			28		22	22	6	50

HOUSE COLOR MATRIX

LOT NUMBERS	HOUSE EXT COLOR
104, 109, 112, 117, 123	A
102, 108, 115, 118, 124	B
105, 201, 301	C
103, 110, 114, 120	D
111, 119, 122, 126	E
106, 113, 121, 125	F
101, 107, 116	G

ROOF SHINGLE COLOR

LOT NUMBERS	SHINGLE COLOR
ALL HOMES	COLONIAL SLATE

HOUSE COLOR KEY

SYMBOL	HOUSE COLOR	TRIM COLOR	DOOR COLOR
A	WHITE	WHITE	BLACK
B	CREAM	WHITE	BLACK
C	TAN	WHITE	BLACK
D	IVY	WHITE	BLACK
E	TUMBLEWEED	WHITE	BLACK
F	WEDGEWOOD	WHITE	BLACK
G	STEEL BLUE	WHITE	BLACK

GENERAL NOTES

1. SEE SEPARATE SITE PACKAGE FOR LEED-H RELATED ITEMS.

SITE PLAN KEY

SITE PLAN:

(001) LOT NUMBER

58 . a (r) BUILDING TYPE 58, ELEVATION a, REVERSED
- REVERSED IMAGE
- ELEVATION TYPE
- BUILDING TYPE

Atlantic COMMUNITIES Marine Corps — A Lend Lease Community

INCIDENT & INJURY FREE
SIN LESIÓN O ACCIDENTE

LOVE SAFE WORK SAFE / VIVA SEGURO TRABAJE SEGURO

Actus Lend Lease

Issue:	Date:
100% SUBMITTAL	2/08/2011

GARRISON GREENWOOD ARCHITECTS, INC.
12 EDUCATION WAY
DOVER, NH 03820
603.516.3212
www.ggarchitc.com

CHRISTINE E CASTALDO
REGISTERED ARCHITECT
11975
NORTH CAROLINA
CHARLOTTE, NC

PHASE 3
50 NEW HOMES AT KNOX LANDING
CAMP LEJEUNE NORTH CAROLINA

OVERALL UNIT MATRIX

Project No: 10-003
Drawn: CC
Checked: MA
Approved: CC
*Scale: AS NOTED
*use graphic scales if sheet size varies from 22 x 34

SHEET 3 OF 72

AS1.01

C:\Projects\Actus\VP50SNCO\VP50SNCO\Sheets\AS1.01 OVERALL UNIT MATRIX.dwg Feb 08, 2011 - 10:37am

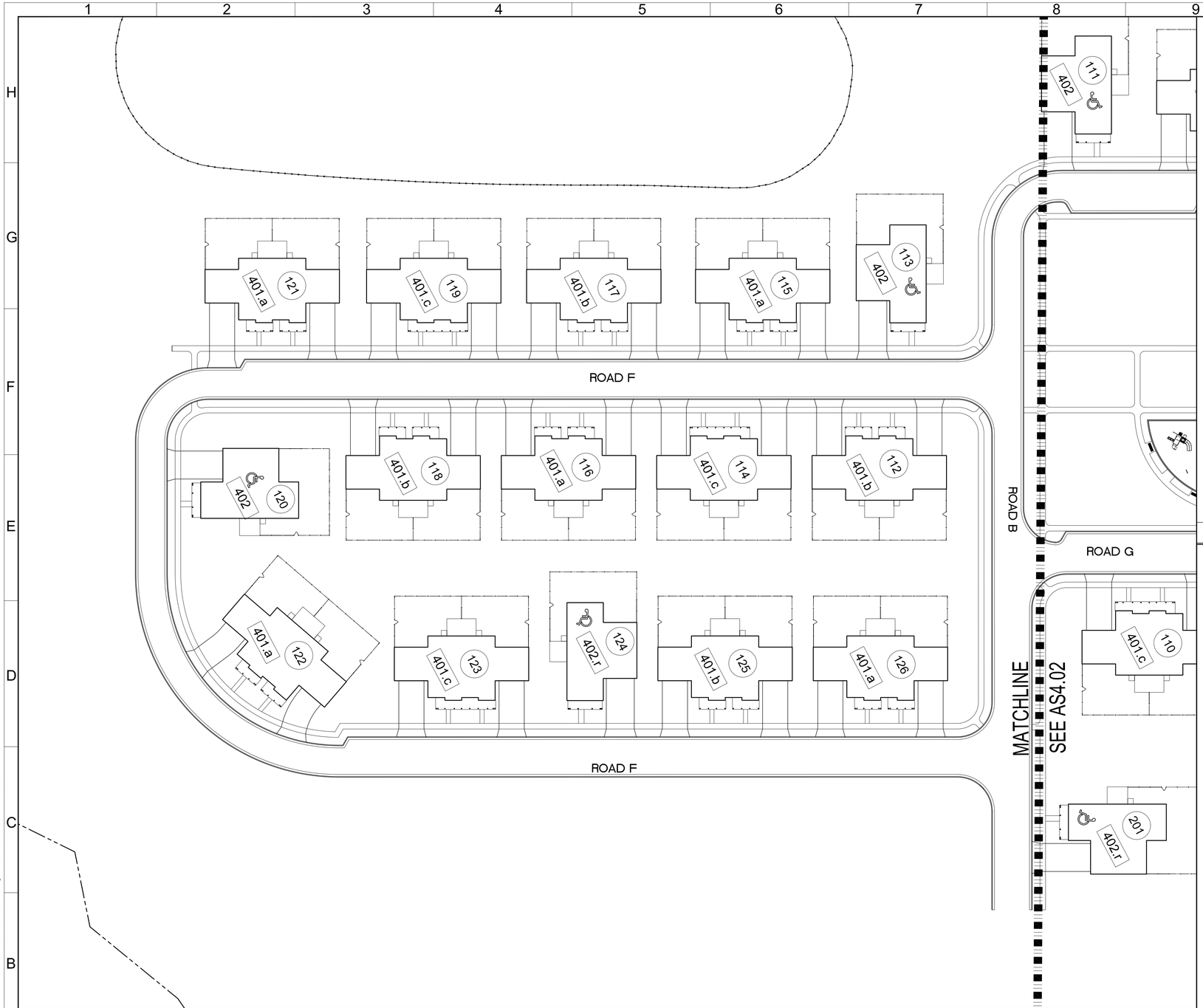

1 **SITE PLAN**
1"=40'-0"

N

KEY PLAN

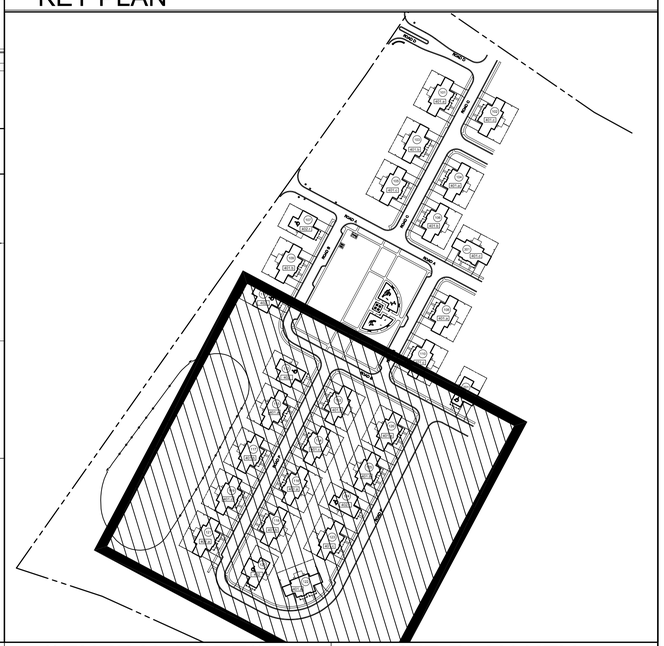

GENERAL NOTES

1. SEE SEPARATE SITE PACKAGE FOR LEED-H RELATED ITEMS.

SITE PLAN KEY

SITE PLAN:

001 LOT NUMBER

58 . a (r) BUILDING TYPE 58, ELEVATION a, REVERSED
REVERSED IMAGE
ELEVATION TYPE
BUILDING TYPE

Atlantic COMMUNITIES
Marine Corps
A Lend Lease Community

INCIDENT & INJURY FREE
SIN LESIÓN O ACCIDENTE

Actus
Lend Lease

Date:	Issue:	Date:	Issue:

100% SUBMITTAL
2/08/2011

GARRISON GROUP ARCHITECTS, INC.
12 EDUCATION WAY
DOVER, NH 03820
603 953 3912
www.ggarcinc.com

CHRISTINE E CASTALDO
REGISTERED ARCHITECT
11975
NORTH CAROLINA
CHARLOTTE, NC

PHASE 3
50 NEW HOMES AT KNOX LANDING
CAMP LEJEUNE NORTH CAROLINA

SITE PLAN FOR BUILDING MATRIX

Project No:	10-003
Drawn:	CC
Checked:	MA
Approved:	CC
*Scale:	AS NOTED

*use graphic scales if sheet size varies from 22 x 34

SHEET 4 OF 72

AS4.01

C:\Projects\Actus\KP50SNCO\KP50SNCO\Sheets\AS4.01 SITE PLAN FOR BUILDING MATRIX.dwg Feb 08, 2011 - 10:39am

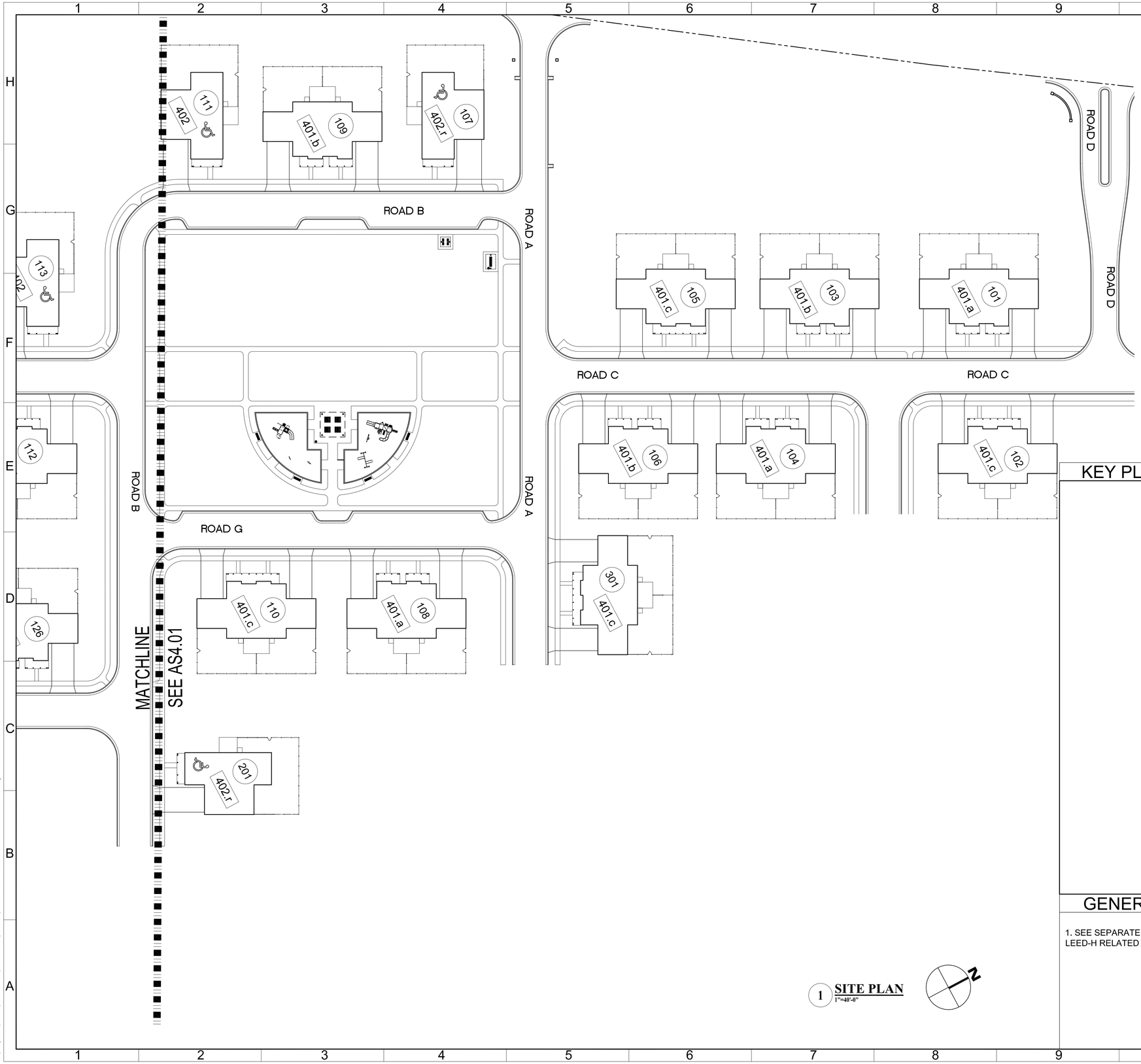

1 SITE PLAN
1"=40'-0"

KEY PLAN

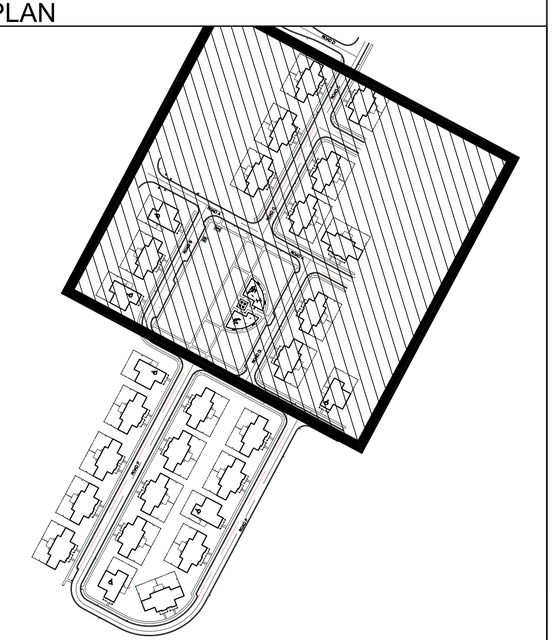

GENERAL NOTES

1. SEE SEPARATE SITE PACKAGE FOR LEED-H RELATED ITEMS.

SITE PLAN KEY

SITE PLAN:

001 LOT NUMBER

58 . a (r) BUILDING TYPE 58, ELEVATION a, REVERSED
REVERSED IMAGE
ELEVATION TYPE
BUILDING TYPE

Atlantic COMMUNITIES
Marine Corps
A Lend Lease Community

INCIDENT & INJURY FREE
SIN LESIÓN O ACCIDENTE

Actus
Lend Lease

Date:	Issue:	Date:	Issue:

100% SUBMITTAL
2/08/2011

GARRISON GROUP ARCHITECTS, INC.
12 EDUCATION WAY
DOVER, NH 03820
603 953 3912
www.ggarcinc.com

CHRISTINE E CASTALDO
REGISTERED ARCHITECT
11975
NORTH CAROLINA
CHARLOTTE, NC

PHASE 3
50 NEW HOMES AT KNOX LANDING
CAMP LEJEUNE NORTH CAROLINA

SITE PLAN FOR BUILDING MATRIX

Project No:	10-003
Drawn:	CC
Checked:	MA
Approved:	CC
*Scale:	AS NOTED

*use graphic scales if sheet size varies from 22 x 34

SHEET 5 OF 72

AS4.02

C:\Projects\Actus\KP50SNCO\KP50SNCO\Sheets\AS4.02 SITE PLAN FOR BUILDING MATRIX.dwg Feb 08, 2011 - 10:39am

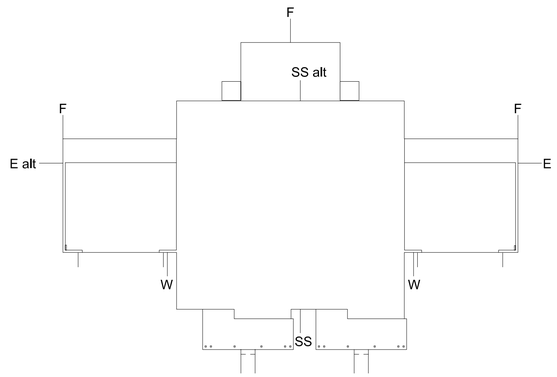

1 **UTILITY CONNECTION PLAN BUILDING TYPE 401a,b & c**
1/16" = 1'-0"
0 8' 16' 32'

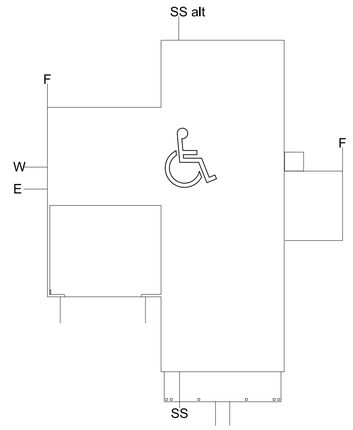

2 **UTILITY CONNECTION PLAN BUILDING TYPE 402**
1/16" = 1'-0"
0 8' 16' 32'

UTILITY PLAN LEGEND

UTILITY POINTS OF CONNECTION PLANS:

F — YARD PRIVACY FENCE APPROXIMATE LOCATION. SEE SITE DRAWINGS BY OTHERS. CONTRACTOR TO COORDINATE LOCATION WITH FLOOR PLANS.

E — ELECTRICAL SERVICE TELEPHONE/ CATV ENTRANCE APPROXIMATE LOCATION. SEE ELECTRICAL SITE DRAWINGS BY OTHERS. CONTRACTOR TO COORDINATE LOCATION WITH FLOOR PLANS.

W — WATER SUPPLY ENTRANCE APPROXIMATE LOCATION. SEE SITE DRAWINGS BY OTHERS, COORDINATE WITH MECHANICAL PLANS, COORDINATE LOCATION WITH FLOOR PLANS.

SS — SANITARY SEWER APPROXIMATE LOCATION. SEE SITE DRAWINGS BY OTHERS, COORDINATE WITH MECHANICAL PLANS, COORDINATE LOCATION WITH FLOOR PLANS. SEE MECHANICAL PLANS FOR LOCATION OF CLEANOUT, AS REQUIRED.

ALTERNATE LOCATION OF UTILITIES ARE SHOWN FOR REFERENCE, COORDINATE WITH SITE DRAWINGS BY OTHERS

NOTE: ALL METERS TO BE LOCATED OUTSIDE OF PRIVATE YARDS.

Atlantic COMMUNITIES
Marine Corps
A Lend Lease Community

INCIDENT & INJURY FREE
SIN LESIÓN O ACCIDENTE

Actus
Lend Lease

Date:	Issue:	Date:	Issue:

100% SUBMITTAL
2/08/2011

GARRISON GROUP ARCHITECTS, INC.
12 EDUCATION WAY
DOVER, NH 03820
603 953 3912
www.ggarcinc.com

CHRISTINE E CASTALDO
REGISTERED ARCHITECT
11975
NORTH CAROLINA
CHARLOTTE, NC

PHASE 3
50 NEW HOMES AT KNOX LANDING
CAMP LEJEUNE NORTH CAROLINA

UTILITY POINTS OF CONNECTION PLANS

Project No: 10-003
Drawn: CC
Checked: MA
Approved: CC
*Scale: AS NOTED
*use graphic scales if sheet size varies from 22 x 34

SHEET 6 OF 72

AS5.01

C:\Projects\Actus\KP50SNCO\KP50SNCO\Sheets\AS5.01 UTILITY POINTS OF CONNECTION PLANS.dwg Feb 08, 2011 - 10:40am

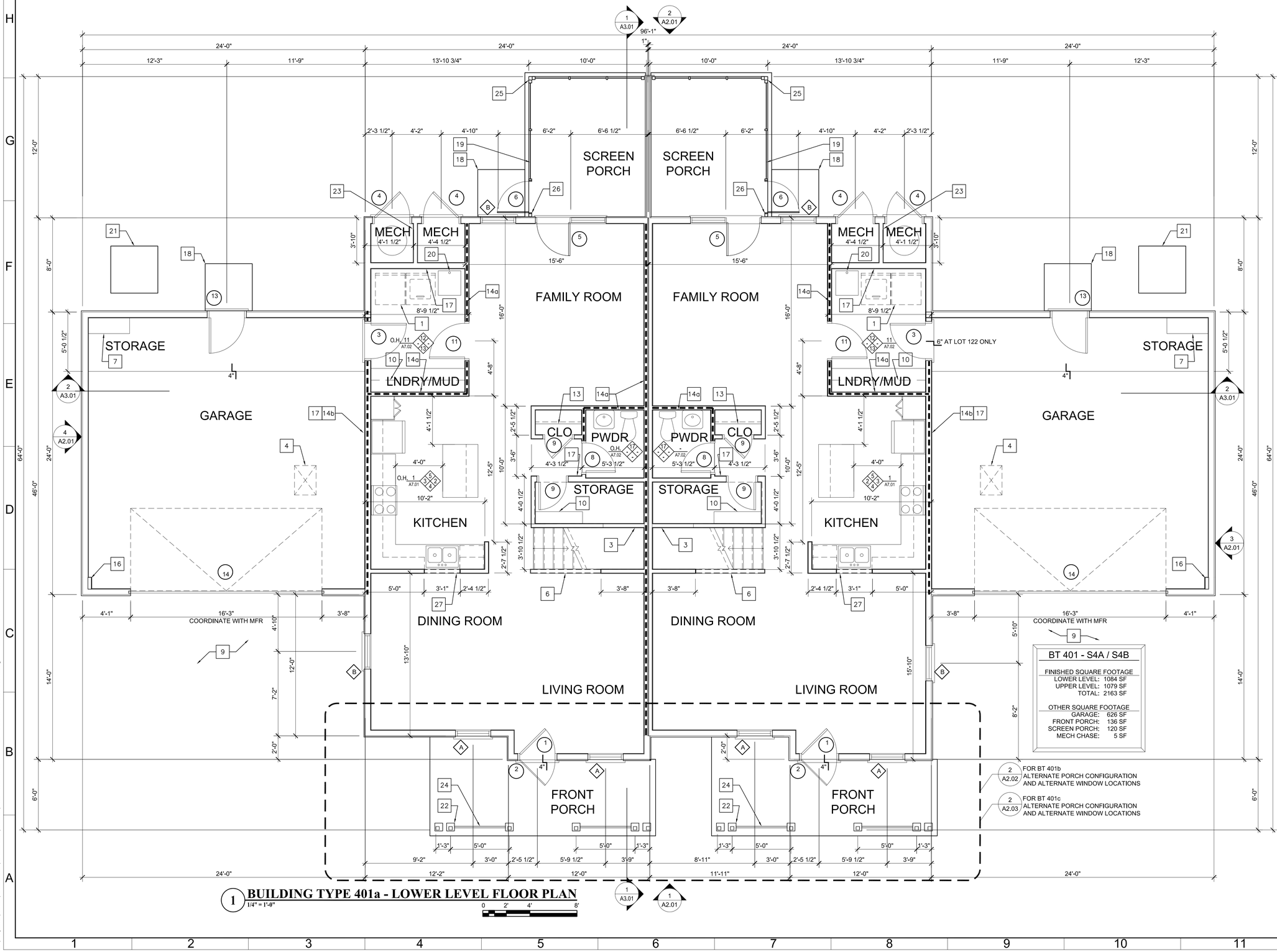

1 BUILDING TYPE 401a - LOWER LEVEL FLOOR PLAN

1/4" = 1'-0"

0 2' 4' 8'

FLOOR PLAN KEY NOTES

(ALL KEY NOTES MAY NOT APPLY TO THIS SHEET)

1. WASHER & DRYER, NOT IN CONTRACT. SEE 1/A5.07 FOR DRYER BOX
2. GRAB BARS, NOT IN CONTRACT- PROVIDE BLOCKING FOR FUTURE INSTALLATION
3. WALL BELOW, SEE STAIR SECTION
4. ATTIC ACCESS SEE 3/A5.07
5. PARTIAL HEIGHT WALL SEE 6/A5.07
6. PARTIAL HEIGHT SLOPED WALL SEE 8/A5.07
7. EXTERIOR SHELVING REFER TO DETAIL E/A7.02
8. LINEN CLOSET SHELVING REFER TO DETAIL B/A7.02
9. FOR DRIVEWAY LOCATIONS & LAYOUT SEE SEPARATE CIVIL DWGS
10. INTERIOR STORAGE SHELVING REFER TO DETAIL A/A7.02
11. BEDROOM CLOSET SHELVING REFER TO DETAIL C/A7.02
12. MASTER BEDROOM SHELVING AND CLOSET ORGANIZER REFER TO DETAIL C/A7.02
13. COAT CLOSET SHELVING REFER TO DETAIL D/A7.02
14a. SOUND INSULATED WALL
14b. THERMAL INSULATED WALL
15. GYP. BD. WRAPPED DROPPED BEAM, SEE 4/A4.01
16. 2X4 FURRED WALL TO ACCOMMODATE FREEZE PROOF HOSE BIBB - COORDINATE LENGTH W/ HOSE BIBB ASSEMBLY
17. 6" INTERIOR STUD WALL
18. 4' X 4' CONCRETE STOOP - SEE STRUCTURAL
19. SCREEN PORCH - VINYL SCREEN SYSTEM
20. UTILITY SINK
21. HOUSEKEEPING PAD - SEE MECHANICAL. COORDINATE SIZE W/ UNIT SELECTED
22. FRONT PORCH COLUMN. SEE 8/A5.02
23. HOLD WALL UP FROM SLAB SEE DETAIL 10/A5.07
24. PORCH ENTRY RAILING
25. TYPICAL SCREEN PORCH CORNER POST - SEE 3/A5.03
26. TYPICAL SCREEN PORCH CORNER/DOOR CONDITION - SEE 7/A5.03
27. OPENING IN WALL SEE INT. ELEVATIONS
28. GYP. BD. WRAPPED HEADER AT 7'-6"
29. WD. CASED OPENING, HDR TO MATCH DOOR HDR HT.
30. PROVIDE SHEATHING ABOVE CLG. TO PROVIDE BAFFLE TO HOLD CLG. INSULATION IN PLACE
31. TUB SURROUND MOISTURE BARRIER BACKER BOARD SEE SPEC

GENERAL NOTES

1) ALL DIMENSIONS ARE TO FACE OF STUD, UON

2) LOCATE INTERIOR DOORS PER 11 / A5.04, UON

3) ALL INTERIOR WALLS ARE 2x4, UON, COORDINATE WITH STRUCTURAL, PLUMBING, ELECTRICAL, & MECHANICAL DRAWINGS

SYMBOLS

- ## DOOR TAG SEE A6.01 FOR SCHEDULE
- ## WINDOW TAG- SEE ELEVATIONS A6.01 FOR SCHEDULE
- ## KEYNOTE SEE KEY NOTE LEGEND
- INTERIOR INSULATED WALL
- INTERIOR ELEVATION TAG SEE A7.00 SERIES
- DETAIL
- SECTION
- ELEVATION

Atlantic COMMUNITIES Marine Corps — A Land Lease Community

INCIDENT & INJURY FREE
SIN LESIÓN O ACCIDENTE

LIVE SAFE WORK SAFE — VIVA SEGURO TRABAJE SEGURO

Actus Lend Lease

Date:	Issue:
Date:	Issue:
2/08/2011	100% SUBMITTAL

GARRISON GROUP ARCHITECTS, INC.
12 EDUCATION WAY
DOVER, NH 03820
603.953.2312
www.ggarchitects.com

CHRISTINE E CASTALDO — REGISTERED ARCHITECT — 11975 — NORTH CAROLINA — CHARLOTTE, NC

PHASE 3
50 NEW HOMES AT KNOX LANDING
CAMP LEJEUNE NORTH CAROLINA

BUILDING TYPE 401 LOWER FLOOR PLAN

Project No:	10-003
Drawn:	CC
Checked:	MA
Approved:	CC
*Scale:	AS NOTED

*use graphic scales if sheet size varies from 22 x 34

SHEET 7 OF 72

A1.01

C:\Projects\Actus\WP50SNCO\WP50SNCO\Sheets\A1.01 BUILDING TYPE 401 LOWER FLOOR PLAN.dwg Feb 08, 2011 - 10:41am

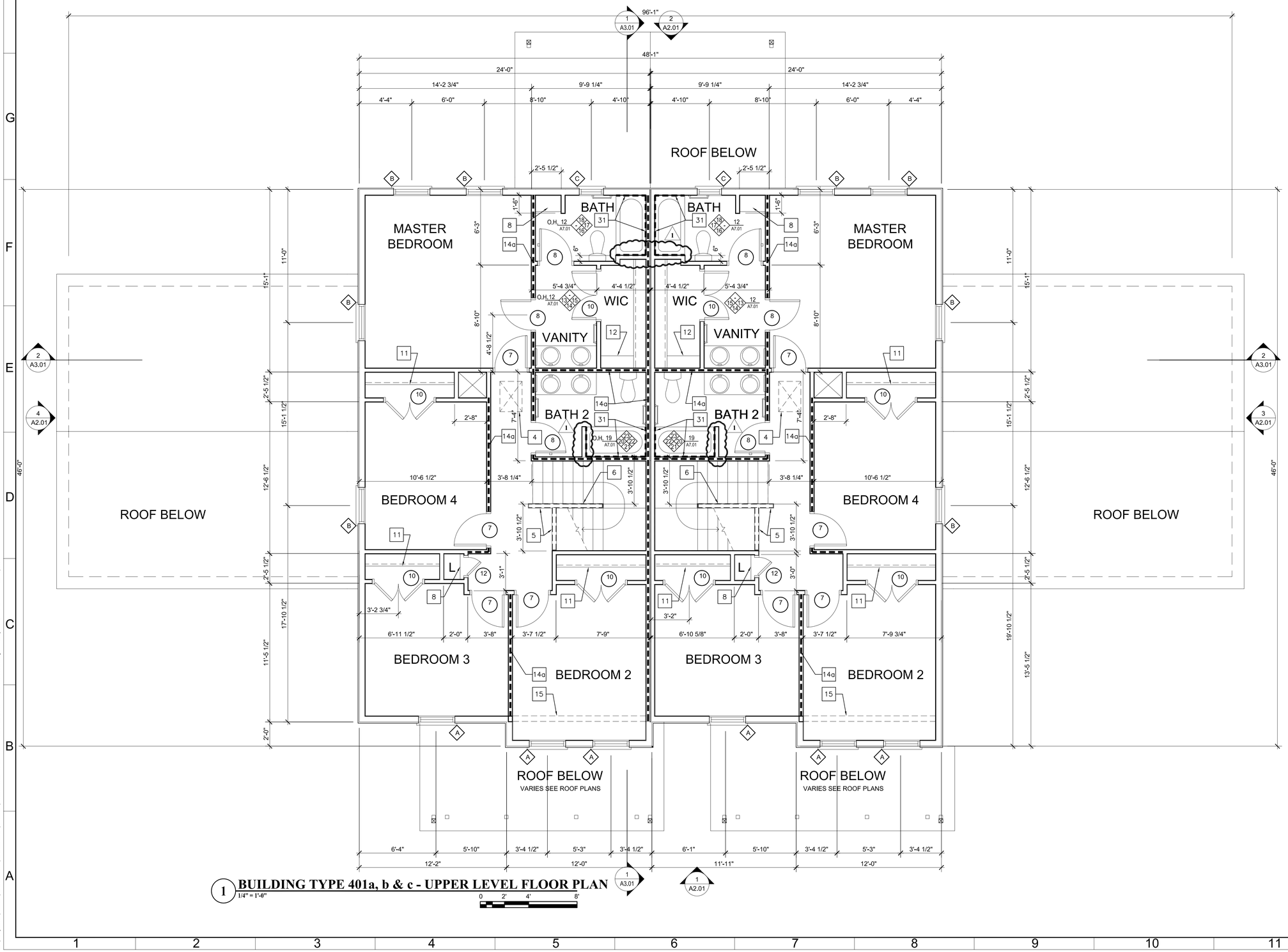

1 BUILDING TYPE 401a, b & c - UPPER LEVEL FLOOR PLAN

1/4" = 1'-0"

0 2' 4' 8'

FLOOR PLAN KEY NOTES

(ALL KEY NOTES MAY NOT APPLY TO THIS SHEET)

1. WASHER & DRYER, NOT IN CONTRACT. SEE 1/A5.07 FOR DRYER BOX
2. GRAB BARS, NOT IN CONTRACT- PROVIDE BLOCKING FOR FUTURE INSTALLATION
3. WALL BELOW, SEE STAIR SECTION
4. ATTIC ACCESS SEE 3/A5.07
5. PARTIAL HEIGHT WALL SEE 6/A5.07
6. PARTIAL HEIGHT SLOPED WALL SEE 8/A5.07
7. EXTERIOR SHELVING REFER TO DETAIL E/A7.02
8. LINEN CLOSET SHELVING REFER TO DETAIL B/A7.02
9. FOR DRIVEWAY LOCATIONS & LAYOUT SEE SEPARATE CIVIL DWGS
10. INTERIOR STORAGE SHELVING REFER TO DETAIL A/A7.02
11. BEDROOM CLOSET SHELVING REFER TO DETAIL C/A7.02
12. MASTER BEDROOM SHELVING AND CLOSET ORGANIZER REFER TO DETAIL C/A7.02
13. COAT CLOSET SHELVING REFER TO DETAIL D/A7.02
14a. SOUND INSULATED WALL
14b. THERMAL INSULATED WALL
15. GYP. BD. WRAPPED DROPPED BEAM, SEE 4/A4.01
16. 2X4 FURRED WALL TO ACCOMMODATE FREEZE PROOF HOSE BIBB - COORDINATE LENGTH W/ HOSE BIBB ASSEMBLY
17. 6" INTERIOR STUD WALL
18. 4' X 4' CONCRETE STOOP - SEE STRUCTURAL
19. SCREEN PORCH - VINYL SCREEN SYSTEM
20. UTILITY SINK
21. HOUSEKEEPING PAD - SEE MECHANICAL. COORDINATE SIZE W/ UNIT SELECTED
22. FRONT PORCH COLUMN. SEE 8/A5.02
23. HOLD WALL UP FROM SLAB SEE DETAIL 10/A5.07
24. PORCH ENTRY RAILING
25. TYPICAL SCREEN PORCH CORNER POST - SEE 3/A5.03
26. TYPICAL SCREEN PORCH CORNER/DOOR CONDITION - SEE 7/A5.03
27. OPENING IN WALL SEE INT. ELEVATIONS
28. GYP. BD. WRAPPED HEADER AT 7'-6"
29. WD. CASED OPENING, HDR TO MATCH DOOR HDR HT.
30. PROVIDE SHEATHING ABOVE CLG. TO PROVIDE BAFFLE TO HOLD CLG. INSULATION IN PLACE
31. TUB SURROUND MOISTURE BARRIER BACKER BOARD SEE SPEC SEE DETAIL 12/A5.07

GENERAL NOTES

1) ALL DIMENSIONS ARE TO FACE OF STUD, UON

2) LOCATE INTERIOR DOORS PER 11 / A5.04, UON

3) ALL INTERIOR WALLS ARE 2x4, UON. COORDINATE WITH STRUCTURAL, PLUMBING, ELECTRICAL, & MECHANICAL DRAWINGS

SYMBOLS

- ## DOOR TAG SEE A6.01 FOR SCHEDULE
- ## WINDOW TAG- SEE ELEVATIONS A6.01 FOR SCHEDULE
- ## KEYNOTE SEE KEY NOTE LEGEND
- INTERIOR INSULATED WALL
- INTERIOR ELEVATION TAG SEE A7.00 SERIES
- DETAIL
- SECTION
- ELEVATION

Atlantic COMMUNITIES Marine Corps — A Lend Lease Community

INCIDENT & INJURY FREE
SIN LESIÓN O ACCIDENTE

LOVE SAFE WORK SAFE — VIVA SEGURO TRABAJE SEGURO

Actus Lend Lease

Date:	Issue:
2/8/2011	100% SUBMITTAL
5/17/2011	BULLETIN NO. 1

GARRISON GROUP ARCHITECTS, INC.
12 EDUCATION WAY
DOVER, NH 03820
603.516.2772
www.ggarchitc.com

CHRISTINE E CASTALDO — REGISTERED ARCHITECT — 11975 — NORTH CAROLINA — CHARLOTTE, NC

PHASE 3
50 NEW HOMES AT KNOX LANDING
CAMP LEJEUNE NORTH CAROLINA

BUILDING TYPE 401 UPPER FLOOR PLAN

Project No:	10-003
Drawn:	CC
Checked:	MA
Approved:	CC
*Scale:	AS NOTED

*use graphic scales if sheet size varies from 22 x 34

SHEET 8 OF 72

A1.02

C:\Projects\Actus\KP50SNCO\KP50SNCO\Sheets\A1.02 BUILDING TYPE 401 UPPER FLOOR PLAN.dwg May 11, 2011 - 6:14pm

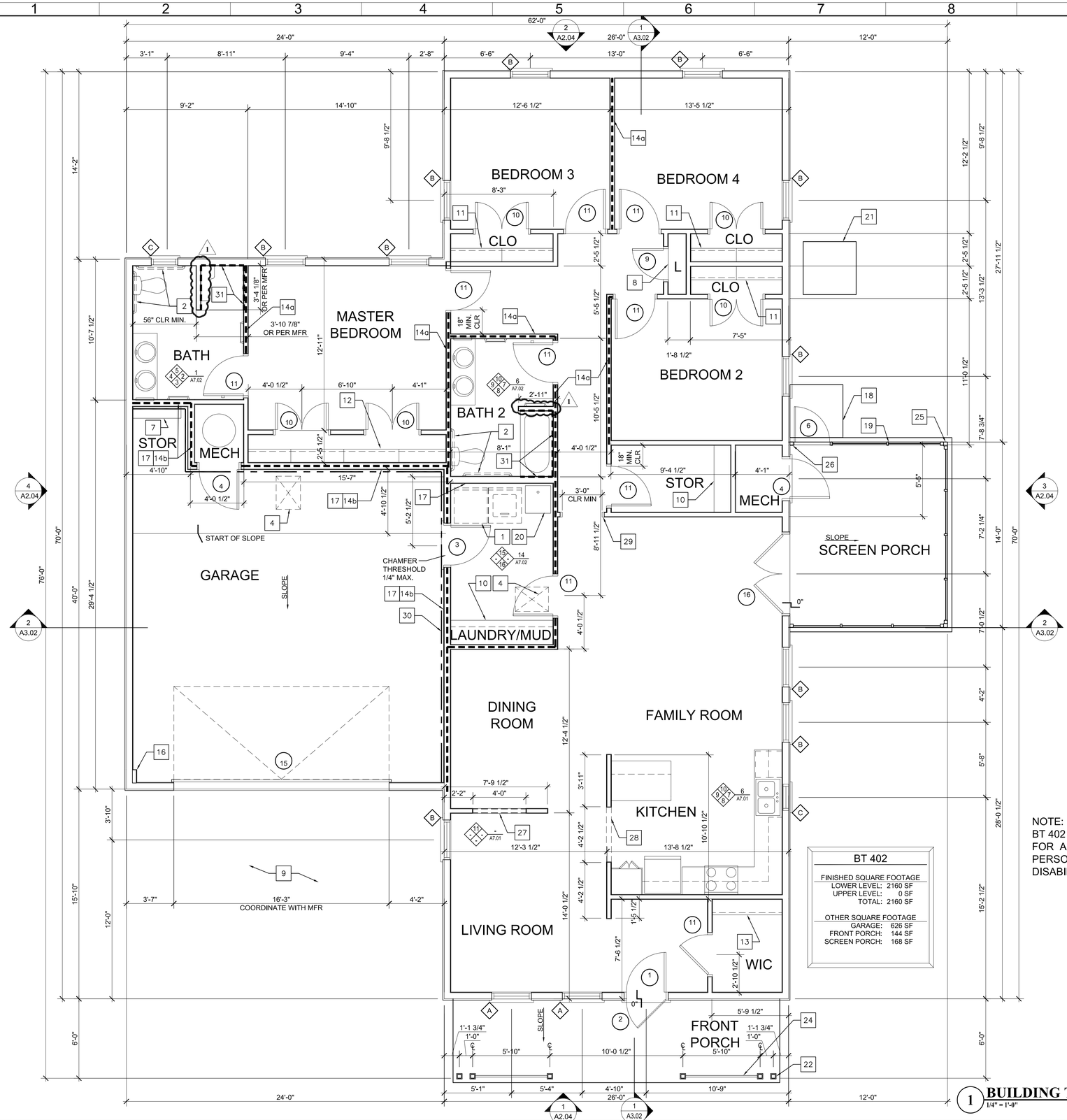

NOTE:
BT 402 IS TO BE ADAPTABLE FOR ACCESSIBILITY TO PERSONS WITH PHYSICAL DISABILITIES.

BT 402	
FINISHED SQUARE FOOTAGE	
LOWER LEVEL:	2160 SF
UPPER LEVEL:	0 SF
TOTAL:	2160 SF
OTHER SQUARE FOOTAGE	
GARAGE:	626 SF
FRONT PORCH:	144 SF
SCREEN PORCH:	168 SF

1 BUILDING TYPE 402 - LOWER LEVEL FLOOR PLAN
1/4" = 1'-0"

0 2' 4' 8'

FLOOR PLAN KEY NOTES

(ALL KEY NOTES MAY NOT APPLY TO THIS SHEET)

1. WASHER & DRYER, NOT IN CONTRACT. SEE 1/A5.07 FOR DRYER BOX
2. GRAB BARS, NOT IN CONTRACT- PROVIDE BLOCKING FOR FUTURE INSTALLATION
3. WALL BELOW, SEE STAIR SECTION
4. ATTIC ACCESS SEE 3/A5.07
5. PARTIAL HEIGHT WALL SEE 6/A5.07
6. PARTIAL HEIGHT SLOPED WALL SEE 8/A5.07
7. EXTERIOR SHELVING REFER TO DETAIL E/A7.02
8. LINEN CLOSET SHELVING REFER TO DETAIL B/A7.02
9. FOR DRIVEWAY LOCATIONS & LAYOUT SEE SEPARATE CIVIL DWGS
10. INTERIOR STORAGE SHELVING REFER TO DETAIL A/A7.02
11. BEDROOM CLOSET SHELVING REFER TO DETAIL C/A7.02
12. MASTER BEDROOM SHELVING AND CLOSET ORGANIZER REFER TO DETAIL C/A7.02
13. COAT CLOSET SHELVING REFER TO DETAIL D/A7.02
14a. SOUND INSULATED WALL
14b. THERMAL INSULATED WALL
15. GYP. BD. WRAPPED DROPPED BEAM, SEE 4/A4.01
16. 2X4 FURRED WALL TO ACCOMMODATE FREEZE PROOF HOSE BIBB - COORDINATE LENGTH W/ HOSE BIBB ASSEMBLY
17. 6" INTERIOR STUD WALL
18. 4' X 4' CONCRETE STOOP - SEE STRUCTURAL
19. SCREEN PORCH - VINYL SCREEN SYSTEM
20. UTILITY SINK
21. HOUSEKEEPING PAD - SEE MECHANICAL. COORDINATE SIZE W/ UNIT SELECTED
22. FRONT PORCH COLUMN. SEE 8/A5.02
23. HOLD WALL UP FROM SLAB SEE DETAIL 10/A5.07
24. PORCH ENTRY RAILING
25. TYPICAL SCREEN PORCH CORNER POST - SEE 3/A5.03
26. TYPICAL SCREEN PORCH CORNER/DOOR CONDITION - SEE 7/A5.03
27. OPENING IN WALL SEE INT. ELEVATIONS
28. GYP. BD. WRAPPED HEADER AT 7'-6"
29. WD. CASED OPENING, HDR TO MATCH DOOR HDR HT.
30. PROVIDE SHEATHING ABOVE CLG. TO PROVIDE BAFFLE TO HOLD CLG. INSULATION IN PLACE
31. TUB SURROUND MOISTURE BARRIER BACKER BOARD SEE SPEC SEE DETAIL 12/A5.07

GENERAL NOTES

1) ALL DIMENSIONS ARE TO FACE OF STUD, UON

2) LOCATE INTERIOR DOORS PER 11 / A5.04, UON

3) ALL INTERIOR WALLS ARE 2x4, UON, COORDINATE WITH STRUCTURAL, PLUMBING, ELECTRICAL, & MECHANICAL DRAWINGS

SYMBOLS

- ## DOOR TAG SEE A6.01 FOR SCHEDULE
- ## WINDOW TAG- SEE ELEVATIONS A6.01 FOR SCHEDULE
- ## KEYNOTE SEE KEY NOTE LEGEND
- INTERIOR INSULATED WALL
- INTERIOR ELEVATION TAG SEE A7.00 SERIES
- 0 / A-000 DETAIL
- 0 / A-000 SECTION
- 0 / A-000 ELEVATION

Atlantic COMMUNITIES Marine Corps — A Land Lease Community

INCIDENT & INJURY FREE
SIN LESIÓN O ACCIDENTE
LOVE SAFE WORK SAFE · VIVA SEGURO TRABAJE SEGURO

Actus Lend Lease

Date:	Issue:
2/8/2011	100% SUBMITTAL
5/17/2011	1 BULLETIN NO. 1

GARRISON GROUP ARCHITECTS, INC.
12 EDUCATION WAY
DOVER, NH 03820
603.553.2122
www.ggarchic.com

CHRISTINE E CASTALDO
REGISTERED ARCHITECT
11975
NORTH CAROLINA
CHARLOTTE, NC

PHASE 3
50 NEW HOMES AT KNOX LANDING
CAMP LEJEUNE NORTH CAROLINA

BUILDING TYPE 402 LOWER LEVEL PLAN

Project No:	10-003
Drawn:	CC
Checked:	MA
Approved:	CC
*Scale:	AS NOTED

*use graphic scales if sheet size varies from 22 x 34

SHEET 9 OF 72

A1.03

C:\Projects\Actus\VP50SNCO\VP50SNCO\Sheets\A1.03 BUILDING TYPE 402 LOWER LEVEL PLAN.dwg May 11, 2011 - 6:13pm

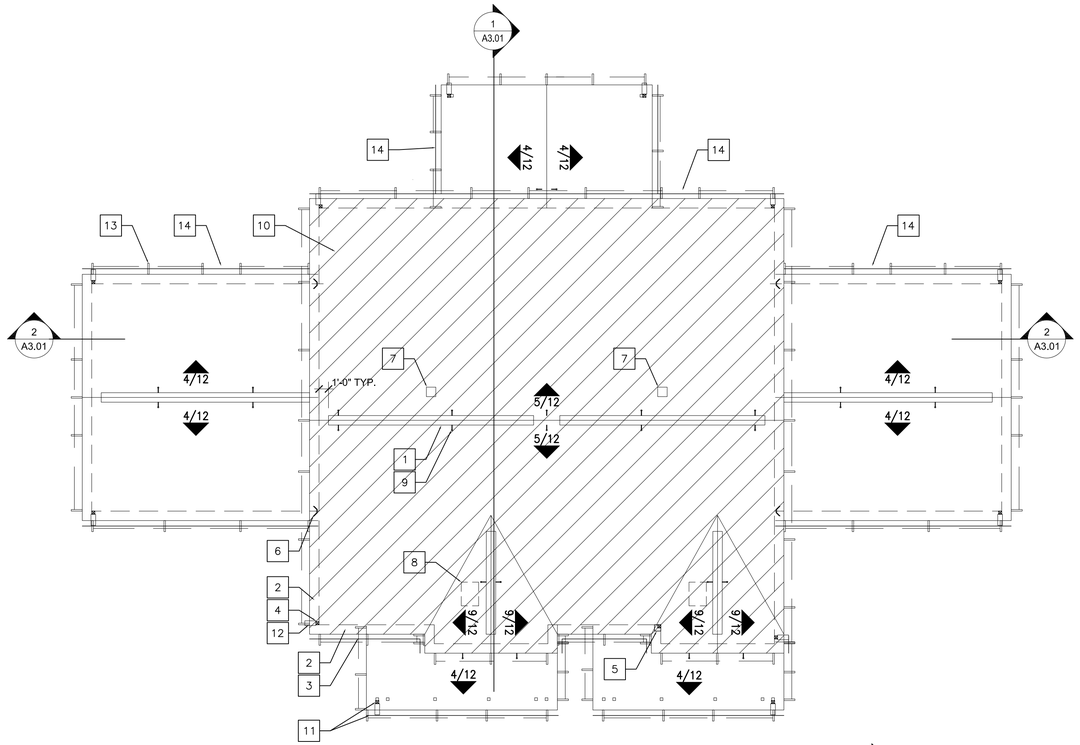

1 BUILDING TYPE 401a - ROOF PLAN
1/8" = 1'-0"
0 2' 4' 8'

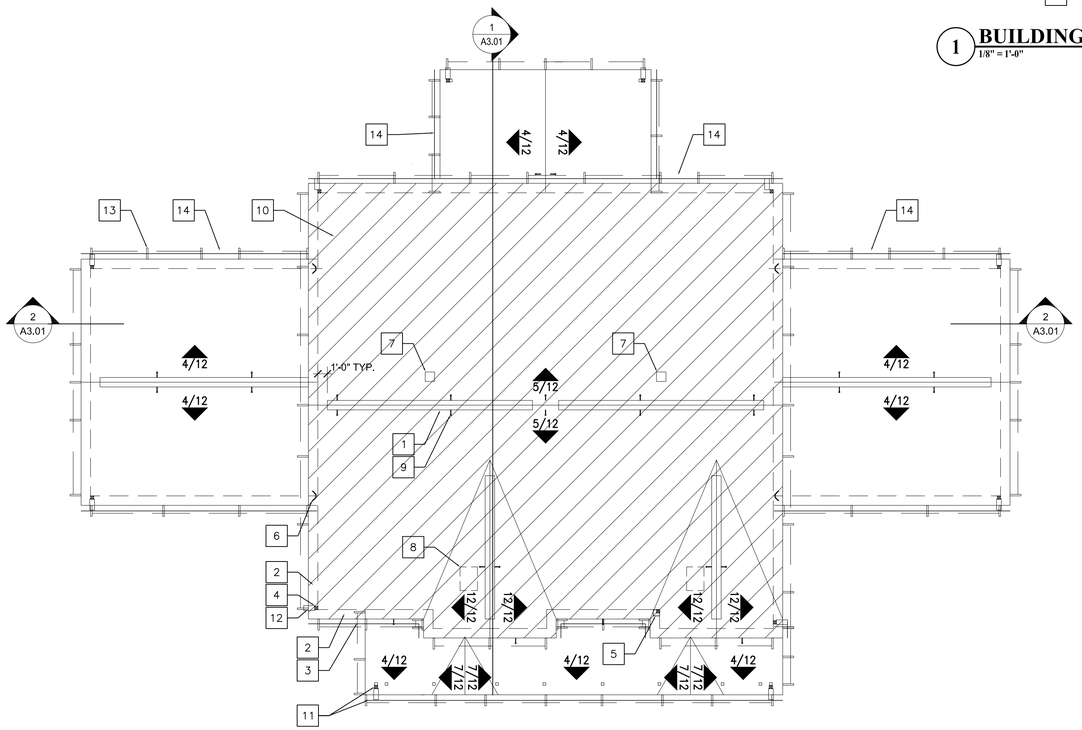

3 BUILDING TYPE 401c - ROOF PLAN
1/8" = 1'-0"
0 2' 4' 8'

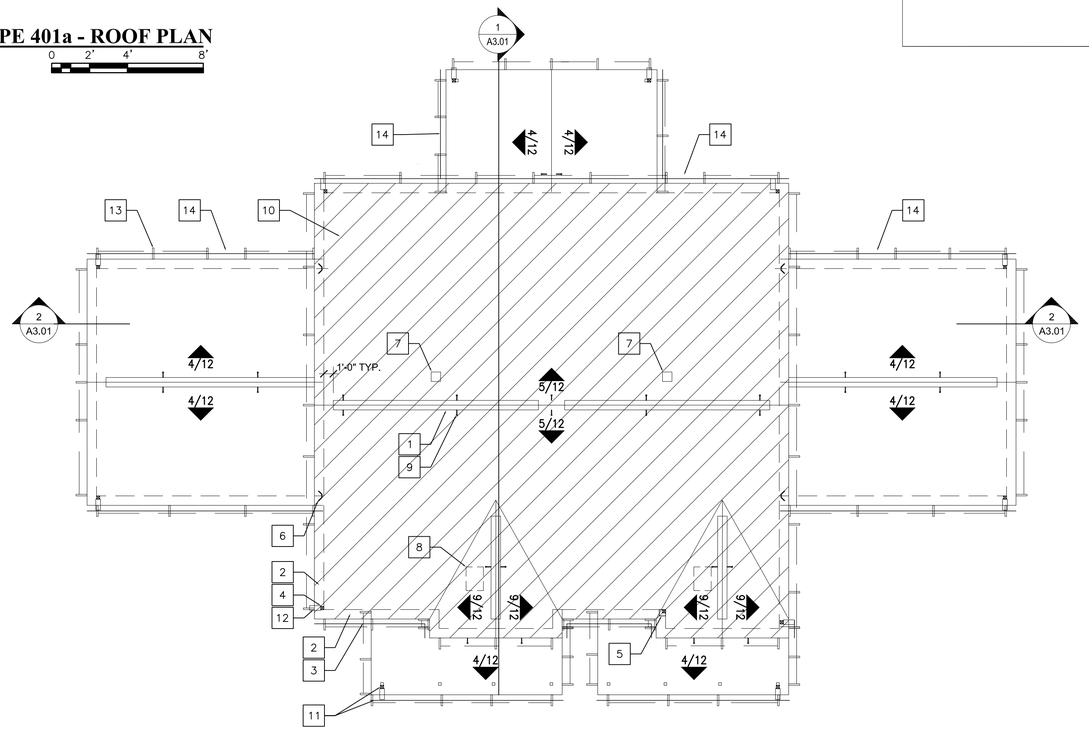

2 BUILDING TYPE 401b - ROOF PLAN
1/8" = 1'-0"
0 2' 4' 8'

ROOF PLAN KEY NOTES

(ALL KEY NOTES MAY NOT APPLY TO THIS SHEET)
ALL ROOF OVERHANG DIMENSIONS 12" UON.

1. RIDGE VENT, TYP SEE 3/A5.01
2. VENTILATED EAVE SOFFIT PANELS, TYP
3. GUTTER, TYP
4. DOWNSPOUT TO GRADE WITH SPLASHBLOCK, TYP
5. DOWNSPOUT TO LOWER ROOF WITH SPLASH DEFLECTOR, TYP
6. RAIN DIVERTER FLASHING, TYP SEE 7/A5.01
7. ROOFTOP VENT, TYP.
8. SEE STRUCTURAL FOR THRU VENTILATION OPENINGS IN SHEATHING AT OVERBUILT AREAS, TYP
9. FALL ARREST ANCHOR LOCATIONS SHOWN ARE SCHEMATIC ONLY. CONTACT MANUFACTURER FOR QUANTITY, LOCATION, AND INSTALLATION.
10. HATCH DENOTES PLACEMENT OF RADIANT BARRIER SHEATHING
11. GALVALUME GUTTER & DOWNSPOUT TO MATCH METAL ROOF PANEL ON FRONT PORCHES, TYP
12. SPLASH BLOCK AT GRADE AT EA. DOWNSPOUT, SEE 8/A5.01, TYP.
13. PASSIVE FALL PROTECTION SYSTEM SUPPLIED BY D/B CONTRACTOR INSTALLED BY FRAMING CONTRACTOR, TYP. BRACKETS AT 8'-0"O.C. TYP., LOCATIONS SHOWN ARE SCHEMATIC ONLY. CONTACT MANUFACTURER FOR QUANTITY, LOCATION, AND INSTALLATION.
14. LADDER ACCESS, PROVIDE 4'-0" OPENING IN PASSIVE FALL PROTECTION SYSTEM

Atlantic COMMUNITIES
Marine Corps
A Lend Lease Community

INCIDENT & INJURY FREE
SIN LESIÓN O ACCIDENTE
LIVE SAFE WORK SAFE
VIVA SEGURO TRABAJE SEGURO

Actus
Lend Lease

Date:	Issue:	Date:	Issue:

100% SUBMITTAL
2/08/2011

GARRISON GROUP ARCHITECTS, INC.
12 EDUCATION WAY
DOVER, NH 03820
603 953 3912
www.ggarcinc.com

CHRISTINE E CASTALDO
REGISTERED ARCHITECT
11975
NORTH CAROLINA
CHARLOTTE, NC

PHASE 3
50 NEW HOMES AT KNOX LANDING
CAMP LEJEUNE NORTH CAROLINA

BUILDING TYPE 401 ROOF PLAN

Project No:	10-003
Drawn:	CC
Checked:	MA
Approved:	CC
*Scale:	AS NOTED

*use graphic scales if sheet size varies from 22 x 34

SHEET 10 OF 72

A1.04

C:\Projects\Actus\KP50SNCO\KP50SNCO\Sheets\A1.04 BUILDING TYPE 401 ROOF PLAN.dwg Feb 08, 2011 - 10:44am

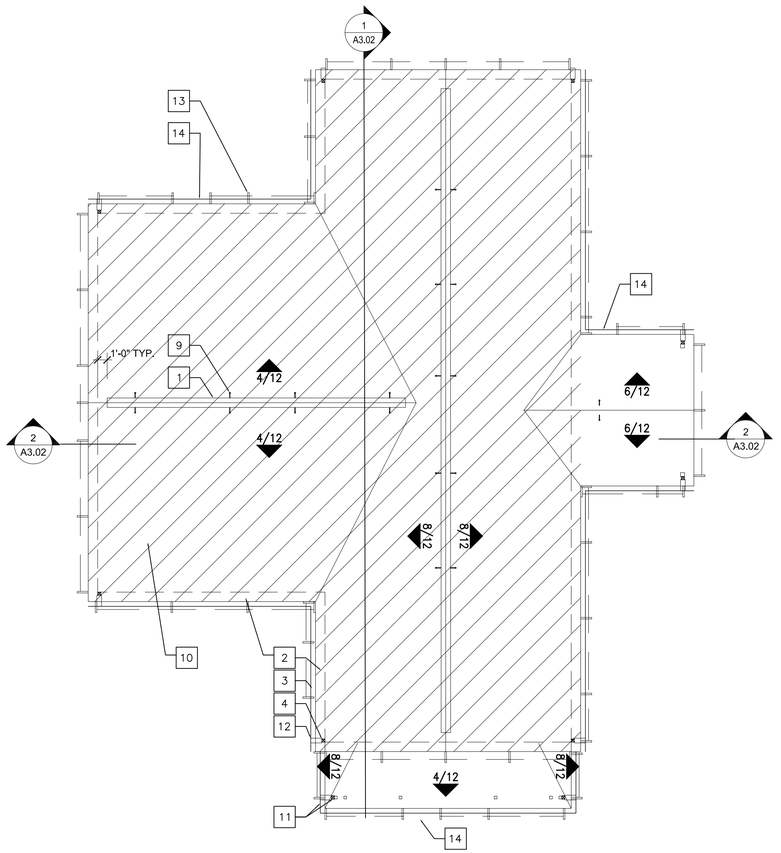

1 **BUILDING TYPE 402 - ROOF PLAN**
1/8" = 1'-0"
0 2' 4' 8'

ROOF PLAN KEY NOTES

(ALL KEY NOTES MAY NOT APPLY TO THIS SHEET)
ALL ROOF OVERHANG DIMENSIONS 12" UON.

1. RIDGE VENT, TYP SEE 3/A5.01
2. VENTILATED EAVE SOFFIT PANELS, TYP
3. GUTTER, TYP
4. DOWNSPOUT TO GRADE WITH SPLASHBLOCK, TYP
5. DOWNSPOUT TO LOWER ROOF WITH SPLASH DEFLECTOR, TYP
6. RAIN DIVERTER FLASHING, TYP SEE 7/A5.01
7. ROOFTOP VENT, TYP.
8. SEE STRUCTURAL FOR THRU VENTILATION OPENINGS IN SHEATHING AT OVERBUILT AREAS, TYP
9. FALL ARREST ANCHOR LOCATIONS SHOWN ARE SCHEMATIC ONLY. CONTACT MANUFACTURER FOR QUANTITY, LOCATION, AND INSTALLATION.
10. HATCH DENOTES PLACEMENT OF RADIANT BARRIER SHEATHING
11. GALVALUME GUTTER & DOWNSPOUT TO MATCH METAL ROOF PANEL ON FRONT PORCHES, TYP
12. SPLASH BLOCK AT GRADE AT EA. DOWNSPOUT, SEE 8/A5.01, TYP.
13. PASSIVE FALL PROTECTION SYSTEM SUPPLIED BY D/B CONTRACTOR INSTALLED BY FRAMING CONTRACTOR, TYP. BRACKETS AT 8'-0"O.C. TYP., LOCATIONS SHOWN ARE SCHEMATIC ONLY. CONTACT MANUFACTURER FOR QUANTITY, LOCATION, AND INSTALLATION.
14. LADDER ACCESS, PROVIDE 4'-0" OPENING IN PASSIVE FALL PROTECTION SYSTEM

Atlantic COMMUNITIES
Marine Corps
A Lend Lease Community

INCIDENT & INJURY FREE
SIN LESIÓN O ACCIDENTE
LIVE SAFE WORK SAFE
VIVA SEGURO TRABAJE SEGURO

Actus
Lend Lease

Date:	Issue:	Date:	Issue:

100% SUBMITTAL
2/08/2011

GARRISON GROUP ARCHITECTS, INC.
12 EDUCATION WAY
DOVER, NH 03820
603 953 3912
www.ggarcinc.com

CHRISTINE E CASTALDO
REGISTERED ARCHITECT
11975
NORTH CAROLINA
CHARLOTTE, NC

PHASE 3
50 NEW HOMES AT KNOX LANDING
CAMP LEJEUNE NORTH CAROLINA

BUILDING TYPE 402 ROOF PLAN

Project No:	10-003
Drawn:	CC
Checked:	MA
Approved:	CC
*Scale:	AS NOTED

*use graphic scales if sheet size varies from 22 x 34

SHEET 11 OF 72

A1.05

C:\Projects\Actus\KP50SNCO\KP50SNCO\Sheets\A1.05 BUILDING TYPE 402 ROOF PLAN.dwg Feb 08, 2011 - 10:45am



1 **BUILDING TYPE 401a - FRONT ELEVATION**
1/4" = 1'-0"

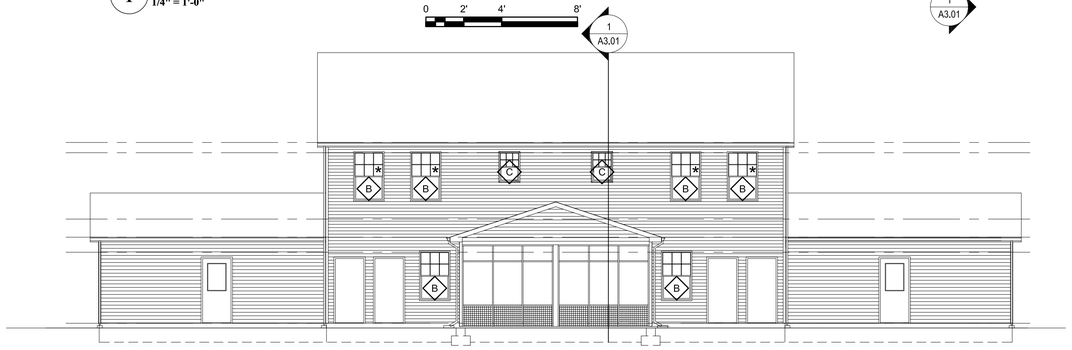

2 **BUILDING TYPE 401a, b & c - REAR ELEVATION**
1/8" = 1'-0"

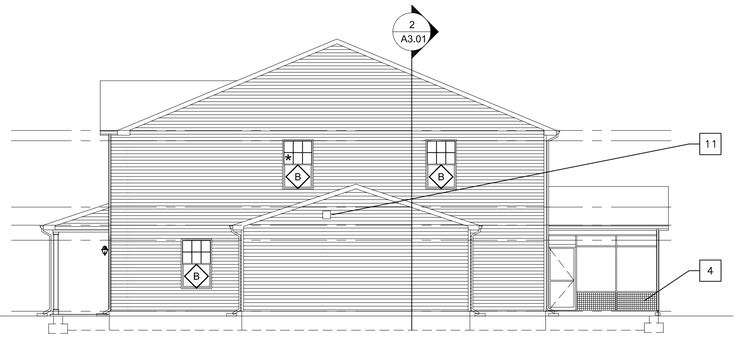

3 **BUILDING TYPE 401a - RIGHT SIDE ELEVATION b & c SIM.**
1/8" = 1'-0"

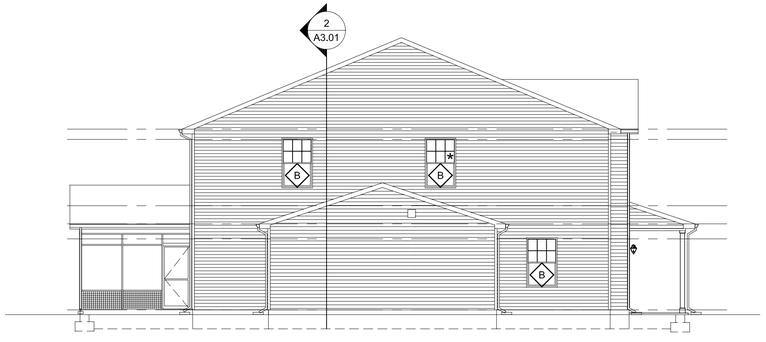

4 **BUILDING TYPE 401a - LEFT SIDE ELEVATION b & c SIM.**
1/8" = 1'-0"

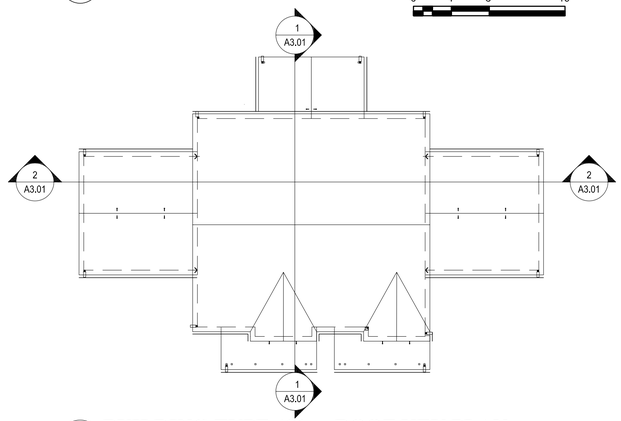

5 **BUILDING TYPE 401a - ROOF KEY PLAN**
1/16" = 1'-0"

ELEVATION KEY NOTES

(ALL KEY NOTES MAY NOT APPLY TO THIS SHEET)

1. COMPOSITE SHINGLES, TYP
2. VINYL SIDING, TYP
3. VINYL CORNER TRIM, TYP
4. SQUARE VINYL LATTICE,TYP
5. METAL CLAD FASCIA, TYP
6. METAL ROOF PANEL, TYP
7. SQUARE COLUMN WRAP, TYP
8. RAISED PANEL COLUMN WRAP, TYP
9. * EMERGENCY EGRESS WINDOW, TYP. SEE A6.01
10. ELECTRICAL FIXTURE, SEE ELECTRICAL DRAWINGS
11. EXHAUST/ INTAKE VENT, SEE MECHANICAL DRAWINGS
12. PROVIDE BLOCKING FOR FLAG POLE MOUTING PLATE. 5'-0" AFF TO CL OF BLOCKING
13. SHAKE VINYL SIDING, TYP
14. VINYL WINDOWS, TYP
15. VINYL LINEAL, TYP. SEE 5/A5.05
16. PORCH ENTRY RAILING, TYP
17. VINYL LINEAL, WINDOW TRIM, FRONT ELEVATION WINDOWS ONLY
18. WHITE GUTTER AND DOWNSPOUT, TERMINATE WITH SPLASH BLOCK, SEE ROOF PLANS
19. GALVALUME GUTTER AND DOWNSPOUT AT MTL ROOFS, TERMINATE WITH SPLASH BLOCK, SEE ROOF PLANS
20. DECORATIVE VINYL GABLE VENT 18x24 AT BT401; 24x30 AT BT402
21. FRONT PORCH COLUMN SEE 9/A5.02
22. FRONT PORCH COLUMN SEE 8/A5.02

SYMBOLS

- ## DOOR TAG SEE A6.01 FOR SCHEDULE
- ## WINDOW TAG- SEE ELEVATIONS A6.01 FOR SCHEDULE
- ## KEYNOTE SEE KEY NOTE LEGEND
- INTERIOR INSULATED WALL
- X A7.01 INTERIOR ELEVATION TAG SEE A7.00 SERIES
- 0 A-000 DETAIL
- 0 A-000 SECTION
- 0 A-000 ELEVATION

LEGEND

2 LEFT ELEVATION
4 REAR ELEVATION
3 RIGHT ELEVATION
1 FRONT ELEVATION

Atlantic COMMUNITIES Marine Corps
A Lend Lease Community

INCIDENT & INJURY FREE
SIN LESIÓN O ACCIDENTE
LIVE SAFE WORK SAFE
VIVA SEGURO TRABAJE SEGURO

Actus Lend Lease

Date:	Issue:	Date:	Issue:

100% SUBMITTAL 2/08/2011

GARRISON GROUP ARCHITECTS, INC.
12 EDUCATION WAY
DOVER, NH 03820
603 953 3912
www.ggarcinc.com

CHRISTINE E CASTALDO
REGISTERED ARCHITECT
11975
NORTH CAROLINA
CHARLOTTE, NC

PHASE 3
50 NEW HOMES AT KNOX LANDING
CAMP LEJEUNE NORTH CAROLINA

BUILDING TYPE 401A EXTERIOR ELEVATIONS

Project No:	10-003
Drawn:	CC
Checked:	MA
Approved:	CC
*Scale:	AS NOTED

*use graphic scales if sheet size varies from 22 x 34

SHEET 12 OF 72

A2.01

C:\Projects\Actus\KP50SNCO\KP50SNCO\Sheets\A2.01 BUILDING TYPE 401a EXTERIOR ELEVATIONS.dwg Feb 08, 2011 - 10:45am



1 BUILDING TYPE 401b- FRONT ELEVATION

1/4" = 1'-0"

0 2' 4' 8'

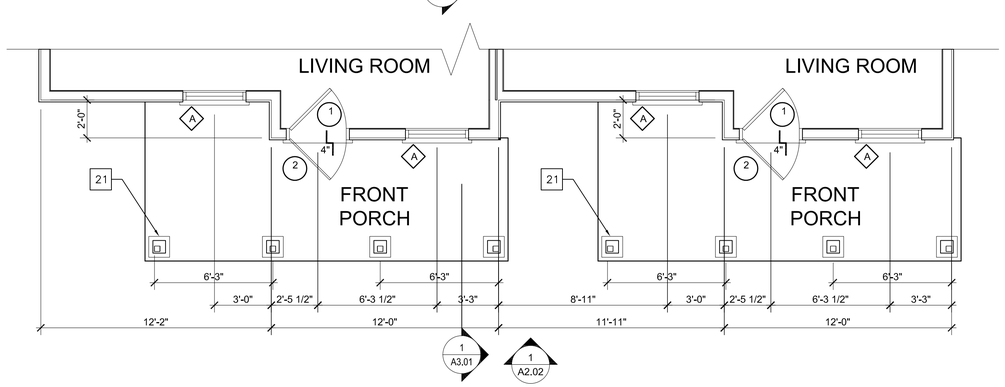

2 BUILDING TYPE 401b - LOWER LEVEL FLOOR PLAN

1/4" = 1'-0"

0 2' 4' 8'

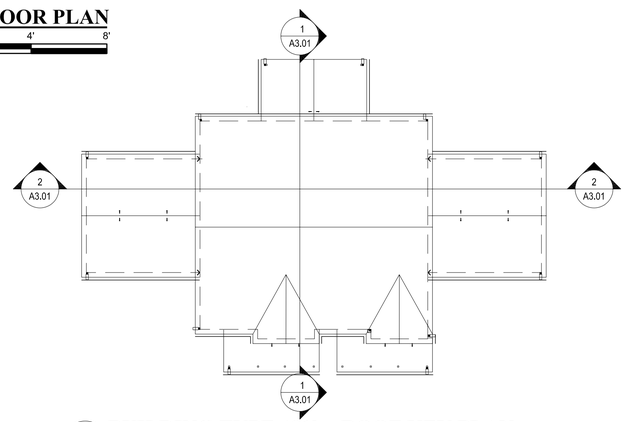

3 BUILDING TYPE 401b - ROOF KEY PLAN

1/16" = 1'-0"

0 8' 16' 32'

ELEVATION KEY NOTES

(ALL KEY NOTES MAY NOT APPLY TO THIS SHEET)

1. COMPOSITE SHINGLES, TYP
2. VINYL SIDING, TYP
3. VINYL CORNER TRIM, TYP
4. SQUARE VINYL LATTICE,TYP
5. METAL CLAD FASCIA, TYP
6. METAL ROOF PANEL, TYP
7. SQUARE COLUMN WRAP, TYP
8. RAISED PANEL COLUMN WRAP, TYP
9. * EMERGENCY EGRESS WINDOW, TYP. SEE A6.01
10. ELECTRICAL FIXTURE, SEE ELECTRICAL DRAWINGS
11. EXHAUST/ INTAKE VENT, SEE MECHANICAL DRAWINGS
12. PROVIDE BLOCKING FOR FLAG POLE MOUTING PLATE. 5'-0" AFF TO CL OF BLOCKING
13. SHAKE VINYL SIDING, TYP
14. VINYL WINDOWS, TYP
15. VINYL LINEAL, TYP. SEE 5/A5.05
16. PORCH ENTRY RAILING, TYP
17. VINYL LINEAL, WINDOW TRIM, FRONT ELEVATION WINDOWS ONLY
18. WHITE GUTTER AND DOWNSPOUT, TERMINATE WITH SPLASH BLOCK, SEE ROOF PLANS
19. GALVALUME GUTTER AND DOWNSPOUT AT MTL ROOFS, TERMINATE WITH SPLASH BLOCK, SEE ROOF PLANS
20. DECORATIVE VINYL GABLE VENT 18x24 AT BT401; 24x30 AT BT402
21. FRONT PORCH COLUMN SEE 9/A5.02
22. FRONT PORCH COLUMN SEE 8/A5.02

SYMBOLS

- ## DOOR TAG SEE A6.01 FOR SCHEDULE
- ## WINDOW TAG- SEE ELEVATIONS A6.01 FOR SCHEDULE
- ## KEYNOTE SEE KEY NOTE LEGEND
- INTERIOR INSULATED WALL
- 1/2/3 X A7.01 INTERIOR ELEVATION TAG SEE A7.00 SERIES
- 0 A-000 DETAIL
- 0 A-000 SECTION
- 0 A-000 ELEVATION

LEGEND

2 LEFT ELEVATION
4 3 REAR ELEVATION
RIGHT ELEVATION
1 FRONT ELEVATION

Atlantic COMMUNITIES Marine Corps — A Land Lease Community

INCIDENT & INJURY FREE
SIN LESIÓN O ACCIDENTE

LIVE SAFE WORK SAFE — VIVA SEGURO TRABAJE SEGURO

Actus Lend Lease

Date:	Issue:
2/08/2011	100% SUBMITTAL

GARRISON GROUP ARCHITECTS, INC.
12 EDUCATION WAY
DOVER, NH 03820
603.743.3212
www.ggarchtc.com

CHRISTINE E. CASTALDO
REGISTERED ARCHITECT
11975
NORTH CAROLINA
CHARLOTTE, NC

PHASE 3
50 NEW HOMES AT KNOX LANDING
CAMP LEJEUNE NORTH CAROLINA

BUILDING TYPE 401B EXTERIOR ELEVATIONS

Project No:	10-003
Drawn:	CC
Checked:	MA
Approved:	CC
*Scale:	AS NOTED

*use graphic scales if sheet size varies from 22 x 34

SHEET 13 OF 72

A2.02

C:\Projects\Actus\KP50SNCO\KP50SNCO\Sheets\A2.02 BUILDING TYPE 401b EXTERIOR ELEVATIONS.dwg Feb 08, 2011 - 10:46am



1 BUILDING TYPE 401c - FRONT ELEVATION

1/4" = 1'-0"

0 2' 4' 8'

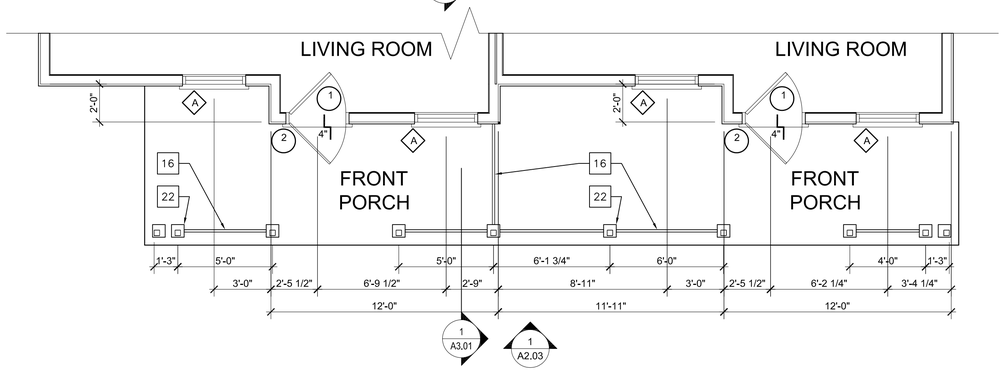

2 BUILDING TYPE 401c - LOWER LEVEL FLOOR PLAN

1/4" = 1'-0"

0 2' 4' 8'

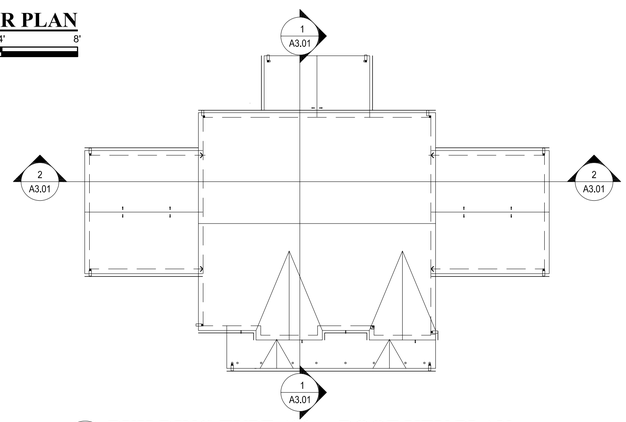

3 BUILDING TYPE 401c - ROOF KEY PLAN

1/16" = 1'-0"

0 8' 16' 32'

ELEVATION KEY NOTES

(ALL KEY NOTES MAY NOT APPLY TO THIS SHEET)

1. COMPOSITE SHINGLES, TYP
2. VINYL SIDING, TYP
3. VINYL CORNER TRIM, TYP
4. SQUARE VINYL LATTICE,TYP
5. METAL CLAD FASCIA, TYP
6. METAL ROOF PANEL, TYP
7. SQUARE COLUMN WRAP, TYP
8. RAISED PANEL COLUMN WRAP, TYP
9. * EMERGENCY EGRESS WINDOW, TYP. SEE A6.01
10. ELECTRICAL FIXTURE, SEE ELECTRICAL DRAWINGS
11. EXHAUST/ INTAKE VENT, SEE MECHANICAL DRAWINGS
12. PROVIDE BLOCKING FOR FLAG POLE MOUTING PLATE. 5'-0" AFF TO CL OF BLOCKING
13. SHAKE VINYL SIDING, TYP
14. VINYL WINDOWS, TYP
15. VINYL LINEAL, TYP. SEE 5/A5.05
16. PORCH ENTRY RAILING, TYP
17. VINYL LINEAL, WINDOW TRIM, FRONT ELEVATION WINDOWS ONLY
18. WHITE GUTTER AND DOWNSPOUT, TERMINATE WITH SPLASH BLOCK, SEE ROOF PLANS
19. GALVALUME GUTTER AND DOWNSPOUT AT MTL ROOFS, TERMINATE WITH SPLASH BLOCK, SEE ROOF PLANS
20. DECORATIVE VINYL GABLE VENT 18x24 AT BT401; 24x30 AT BT402
21. FRONT PORCH COLUMN SEE 9/A5.02
22. FRONT PORCH COLUMN SEE 8/A5.02

SYMBOLS

- (##) DOOR TAG — SEE A6.01 FOR SCHEDULE
- ◇ ## WINDOW TAG- SEE ELEVATIONS A6.01 FOR SCHEDULE
- ## KEYNOTE — SEE KEY NOTE LEGEND
- INTERIOR INSULATED WALL
- 1/2/3 X A7.01 INTERIOR ELEVATION TAG — SEE A7.00 SERIES
- 0 A-000 DETAIL
- 0 A-000 SECTION
- 0 A-000 ELEVATION

LEGEND

- 1 LEFT ELEVATION
- 2 REAR ELEVATION
- 3 RIGHT ELEVATION
- 4 FRONT ELEVATION

Atlantic COMMUNITIES
Marine Corps
A Land Lease Community

INCIDENT & INJURY FREE
SIN LESIÓN O ACCIDENTE

LIVE SAFE WORK SAFE — VIVA SEGURO TRABAJE SEGURO

Actus
Lend Lease

Date:	Issue:

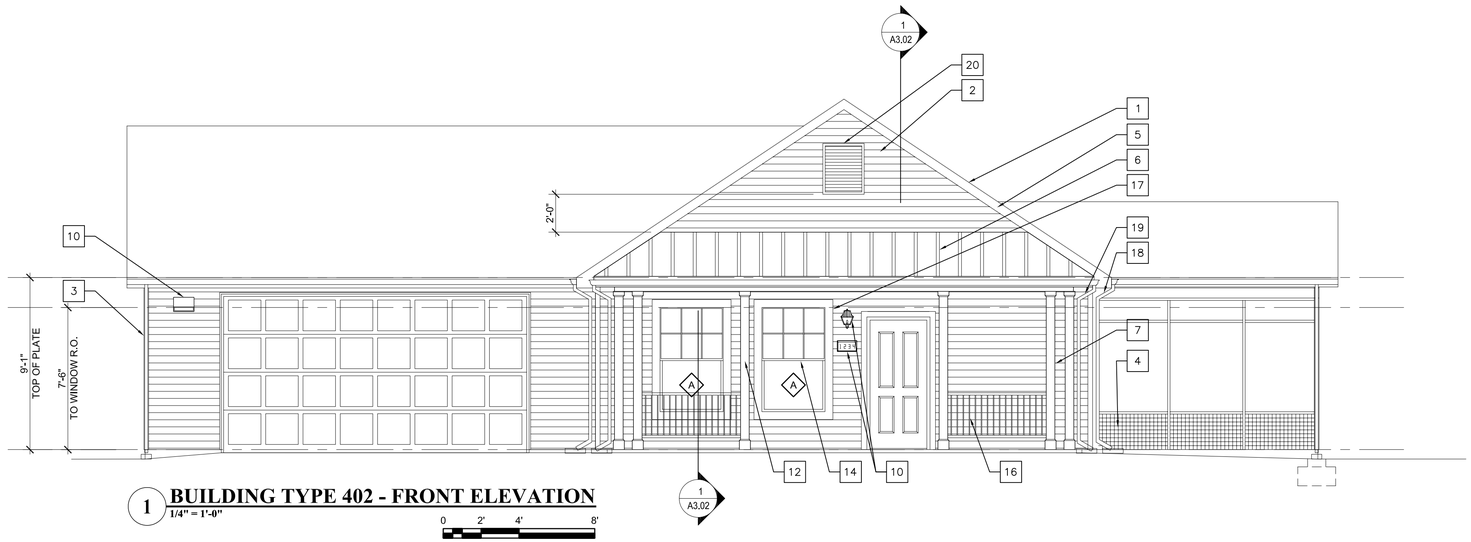

1 **BUILDING TYPE 402 - FRONT ELEVATION**
1/4" = 1'-0"
0 2' 4' 8'

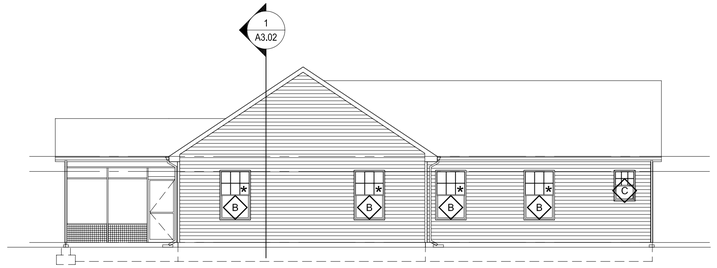

2 **BUILDING TYPE 402 - REAR ELEVATION**
1/8" = 1'-0"
0 4' 8' 16'

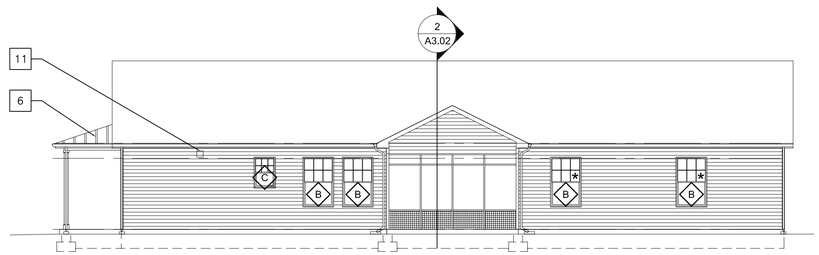

3 **BUILDING TYPE 402 - SIDE ELEVATION**
1/8" = 1'-0"
0 4' 8' 16'

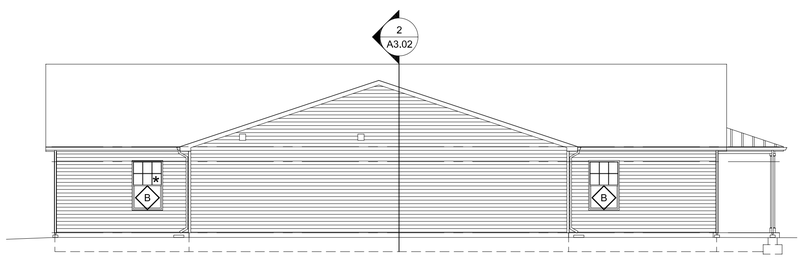

4 **BUILDING TYPE 402 - LEFT SIDE ELEVATION**
1/8" = 1'-0"
0 4' 8' 16'

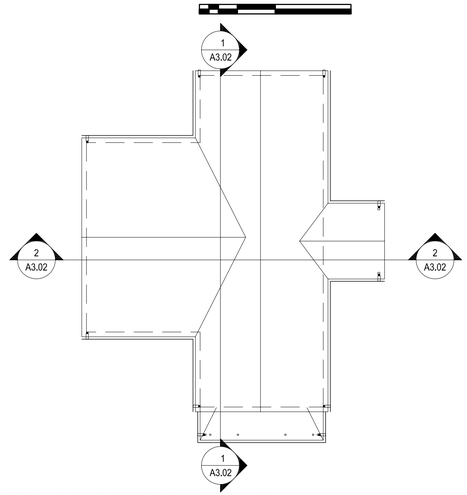

3 **BUILDING TYPE 402 - ROOF KEY PLAN**
1/16" = 1'-0"
0 8' 16' 32'

ELEVATION KEY NOTES

(ALL KEY NOTES MAY NOT APPLY TO THIS SHEET)

1. COMPOSITE SHINGLES, TYP
2. VINYL SIDING, TYP
3. VINYL CORNER TRIM, TYP
4. SQUARE VINYL LATTICE,TYP
5. METAL CLAD FASCIA, TYP
6. METAL ROOF PANEL, TYP
7. SQUARE COLUMN WRAP, TYP
8. RAISED PANEL COLUMN WRAP, TYP
9. * EMERGENCY EGRESS WINDOW, TYP. SEE A6.01
10. ELECTRICAL FIXTURE, SEE ELECTRICAL DRAWINGS
11. EXHAUST/ INTAKE VENT, SEE MECHANICAL DRAWINGS
12. PROVIDE BLOCKING FOR FLAG POLE MOUTING PLATE. 5'-0" AFF TO CL OF BLOCKING
13. SHAKE VINYL SIDING, TYP
14. VINYL WINDOWS, TYP
15. VINYL LINEAL, TYP. SEE 5/A5.05
16. PORCH ENTRY RAILING, TYP
17. VINYL LINEAL, WINDOW TRIM, FRONT ELEVATION WINDOWS ONLY
18. WHITE GUTTER AND DOWNSPOUT, TERMINATE WITH SPLASH BLOCK, SEE ROOF PLANS
19. GALVALUME GUTTER AND DOWNSPOUT AT MTL ROOFS, TERMINATE WITH SPLASH BLOCK, SEE ROOF PLANS
20. DECORATIVE VINYL GABLE VENT 18x24 AT BT401; 24x30 AT BT402
21. FRONT PORCH COLUMN SEE 9/A5.02
22. FRONT PORCH COLUMN SEE 8/A5.02

SYMBOLS

- ## DOOR TAG SEE A6.01 FOR SCHEDULE
- ## WINDOW TAG- SEE ELEVATIONS A6.01 FOR SCHEDULE
- ## KEYNOTE SEE KEY NOTE LEGEND
- INTERIOR INSULATED WALL
- X A7.01 INTERIOR ELEVATION TAG SEE A7.00 SERIES
- 0 A-000 DETAIL
- 0 A-000 SECTION
- 0 A-000 ELEVATION

LEGEND

2 LEFT ELEVATION
4 REAR ELEVATION
3 RIGHT ELEVATION
1 FRONT ELEVATION

Atlantic COMMUNITIES Marine Corps
A Lend Lease Community

INCIDENT & INJURY FREE
SIN LESIÓN O ACCIDENTE
LIVE SAFE WORK SAFE
VIVA SEGURO TRABAJE SEGURO

Actus Lend Lease

Date:	Issue:	Date:	Issue:

100% SUBMITTAL
2/08/2011

GARRISON GROUP ARCHITECTS, INC.
12 EDUCATION WAY
DOVER, NH 03820
603 953 3912
www.ggarcinc.com

CHRISTINE E CASTALDO
REGISTERED ARCHITECT
11975
NORTH CAROLINA
CHARLOTTE, NC

PHASE 3
50 NEW HOMES AT KNOX LANDING
CAMP LEJEUNE NORTH CAROLINA

BUILDING TYPE 402 EXTERIOR ELEVATIONS

Project No:	10-003
Drawn:	CC
Checked:	MA
Approved:	CC
*Scale:	AS NOTED

*use graphic scales if sheet size varies from 22 x 34

SHEET 15 OF 72

A2.04

C:\Projects\Actus\KP50SNCO\KP50SNCO\Sheets\A2.04 BUILDING TYPE 402 EXTERIOR ELEVATIONS.dwg Feb 08, 2011 - 10:48am

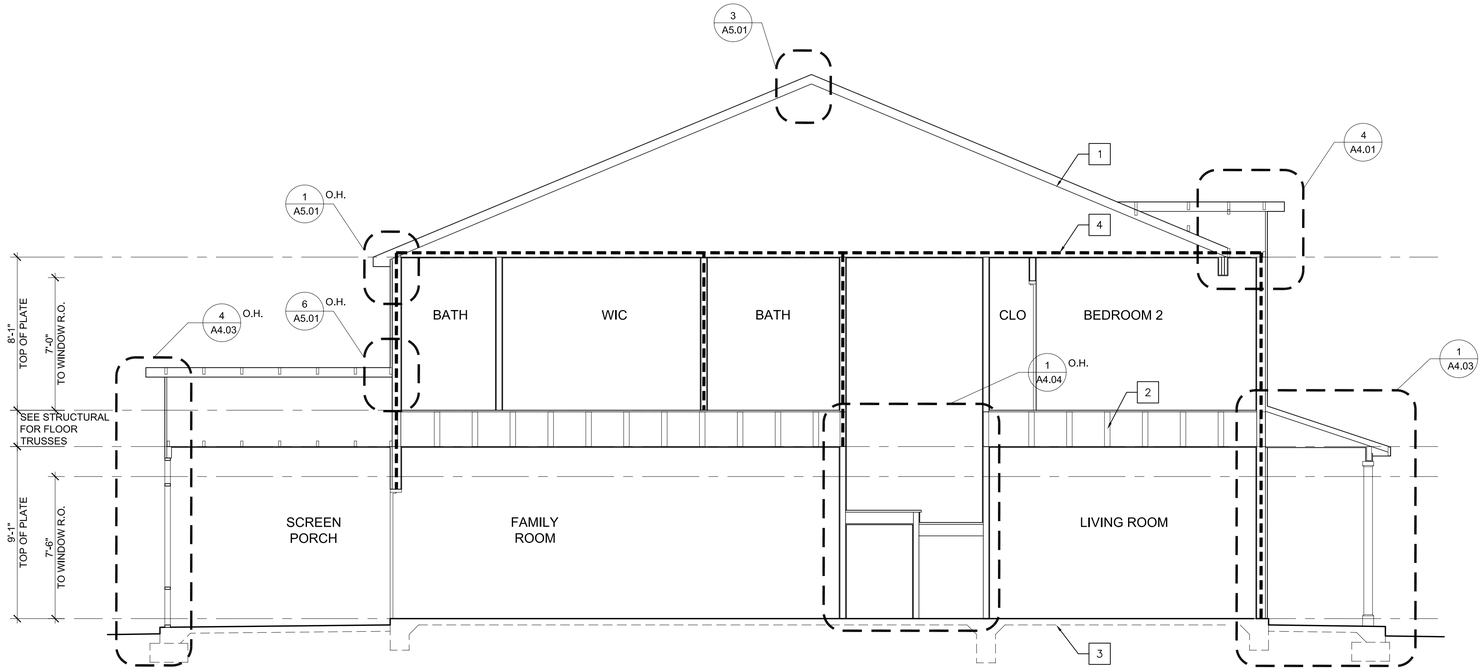

1 **BUILDING TYPE 401 - BUILDING SECTION**
1/4" = 1'-0"
0 2' 4' 8'

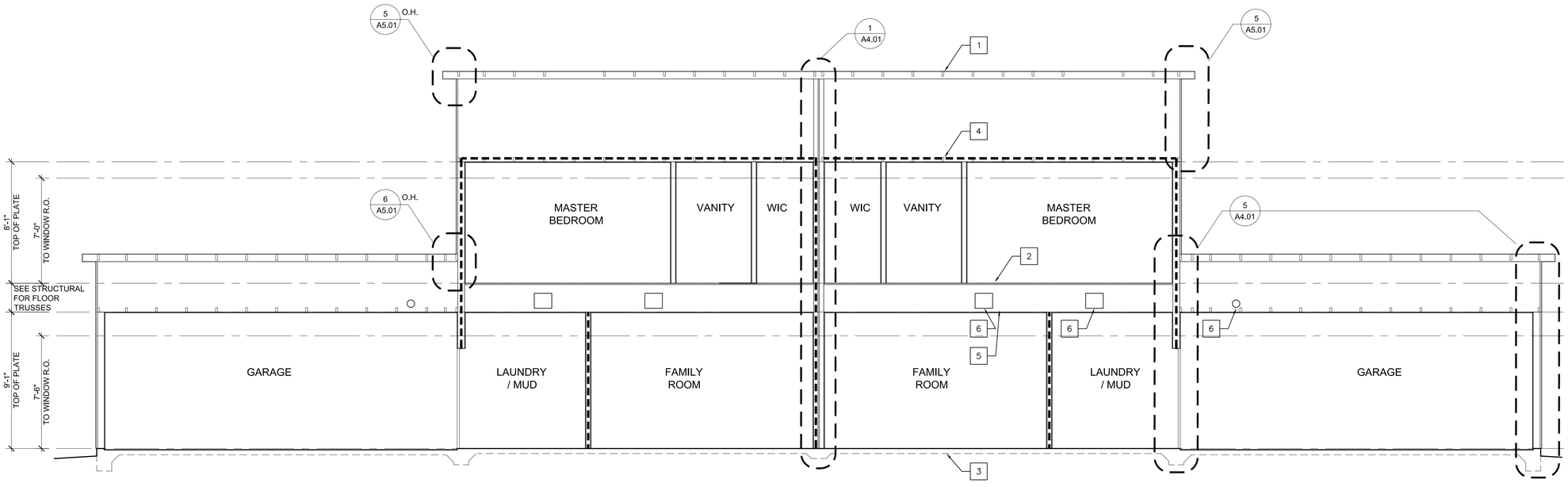

2 **BUILDING TYPE 401 - BUILDING SECTION**
1/4" = 1'-0"
0 2' 4' 8'

SECTION KEY NOTES

(ALL KEY NOTES MAY NOT APPLY TO THIS SHEET)

1. ROOF STRUCTURE, SEE STRUCTURAL DRAWINGS
2. FLOOR FRAMING, SEE STRUCTURAL
3. CONCRETE FOUNDATION SYSTEM - SEE STRUCTURAL DRAWINGS.
4. INSULATION TYP., SEE DETAILS, PLANS, AND SPECIFICATIONS
5. BLOCKOUT AT MID-SPAN OF TRUSS, SEE STRUCTURAL DRAWINGS
6. MECHANICAL DUCTWORK, SEE MECHANICAL DRAWINGS

SYMBOLS

- ## DOOR TAG SEE A6.01 FOR SCHEDULE
- ## WINDOW TAG- SEE ELEVATIONS A6.01 FOR SCHEDULE
- ## KEYNOTE SEE KEY NOTE LEGEND
- INTERIOR INSULATED WALL
- X A7.01 INTERIOR ELEVATION TAG SEE A7.00 SERIES
- 0 A-000 DETAIL
- 0 A-000 SECTION
- 0 A-000 ELEVATION

Atlantic COMMUNITIES Marine Corps
A Lend Lease Community

INCIDENT & INJURY FREE
SIN LESIÓN O ACCIDENTE
LIVE SAFE WORK SAFE
VIVA SEGURO TRABAJE SEGURO

Actus Lend Lease

Date:	Issue:	Date:	Issue:

100% SUBMITTAL 2/08/2011

GARRISON GROUP ARCHITECTS, INC.
12 EDUCATION WAY
DOVER, NH 03820
603 953 3912
www.ggarcinc.com

CHRISTINE E CASTALDO
REGISTERED ARCHITECT
11975
NORTH CAROLINA
CHARLOTTE, NC

PHASE 3
50 NEW HOMES AT KNOX LANDING
CAMP LEJEUNE NORTH CAROLINA

BUILDING TYPE 401
BUILDING SECTIONS

Project No:	10-003
Drawn:	CC
Checked:	MA
Approved:	CC
*Scale:	AS NOTED

*use graphic scales if sheet size varies from 22 x 34

SHEET 16 OF 72

A3.01

C:\Projects\Actus\KP50SNCO\KP50SNCO\Sheets\A3.01 BUILDING TYPE 401 BUILDING SECTIONS.dwg Feb 08, 2011 - 10:48am

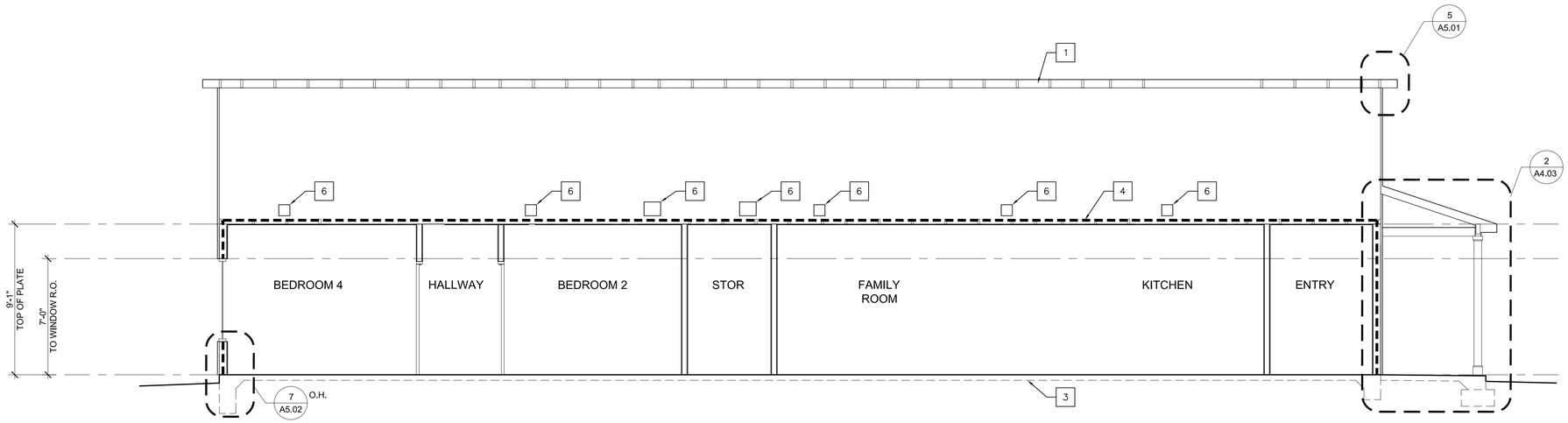

1 **BUILDING TYPE 402 - BUILDING SECTION**
1/4" = 1'-0"
0 2' 4' 8'

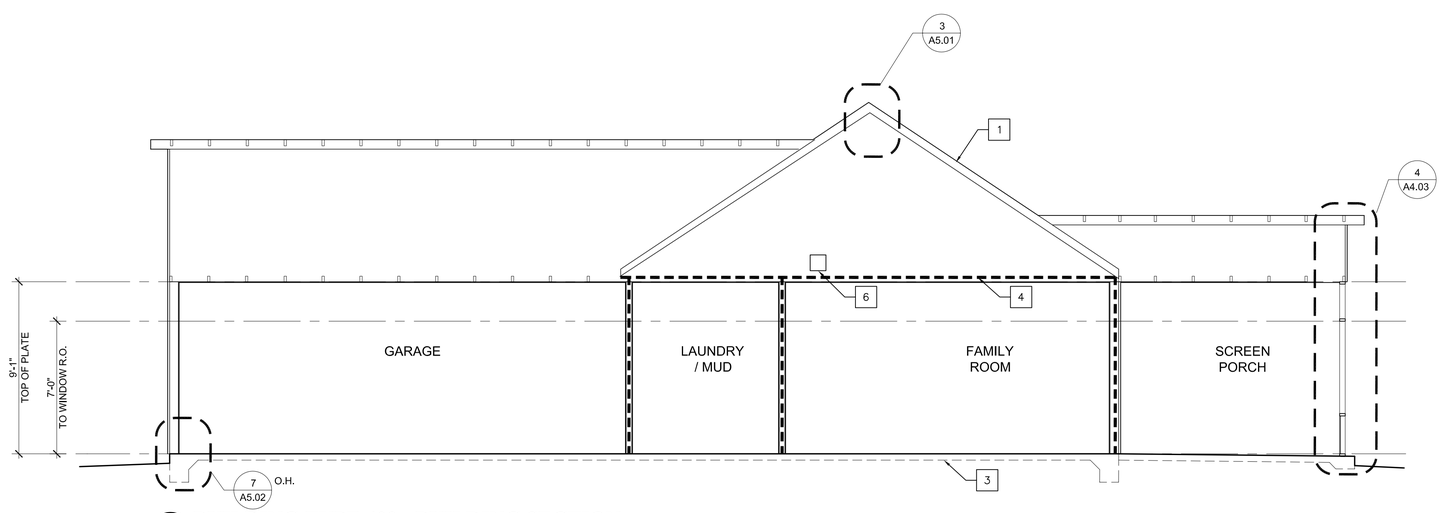

2 **BUILDING TYPE 402 - BUILDING SECTION**
1/4" = 1'-0"
0 2' 4' 8'

SECTION KEY NOTES

(ALL KEY NOTES MAY NOT APPLY TO THIS SHEET)

1. ROOF STRUCTURE, SEE STRUCTURAL DRAWINGS
2. FLOOR FRAMING, SEE STRUCTURAL
3. CONCRETE FOUNDATION SYSTEM - SEE STRUCTURAL DRAWINGS.
4. INSULATION TYP., SEE DETAILS, PLANS, AND SPECIFICATIONS
5. BLOCKOUT AT MID-SPAN OF TRUSS, SEE STRUCTURAL DRAWINGS
6. MECHANICAL DUCTWORK, SEE MECHANICAL DRAWINGS

SYMBOLS

- ## DOOR TAG SEE A6.01 FOR SCHEDULE
- ## WINDOW TAG- SEE ELEVATIONS A6.01 FOR SCHEDULE
- ## KEYNOTE SEE KEY NOTE LEGEND
- INTERIOR INSULATED WALL
- 1 2 3 4 X A7.01 INTERIOR ELEVATION TAG SEE A7.00 SERIES
- 0 A-000 DETAIL
- 0 A-000 SECTION
- 0 A-000 ELEVATION

Atlantic COMMUNITIES Marine Corps
A Lend Lease Community

INCIDENT & INJURY FREE
SIN LESIÓN O ACCIDENTE
LIVE SAFE WORK SAFE
VIVA SEGURO TRABAJE SEGURO

Actus Lend Lease

Date:	Issue:	Date:	Issue:

100% SUBMITTAL 2/08/2011

GARRISON GROUP ARCHITECTS, INC.
12 EDUCATION WAY
DOVER, NH 03820
603 953 3912
www.ggarcinc.com

CHRISTINE E CASTALDO
REGISTERED ARCHITECT
11975
NORTH CAROLINA
CHARLOTTE, NC

PHASE 3
50 NEW HOMES AT KNOX LANDING
CAMP LEJEUNE NORTH CAROLINA

BUILDING TYPE 402 BUILDING SECTIONS

Project No:	10-003
Drawn:	CC
Checked:	MA
Approved:	CC
*Scale:	AS NOTED

*use graphic scales if sheet size varies from 22 x 34

SHEET 17 OF 72

A3.02

C:\Projects\Actus\KP50SNCO\KP50SNCO\Sheets\A3.02 BUILDING TYPE 402 BUILDING SECTIONS.dwg Feb 08, 2011 - 10:49am

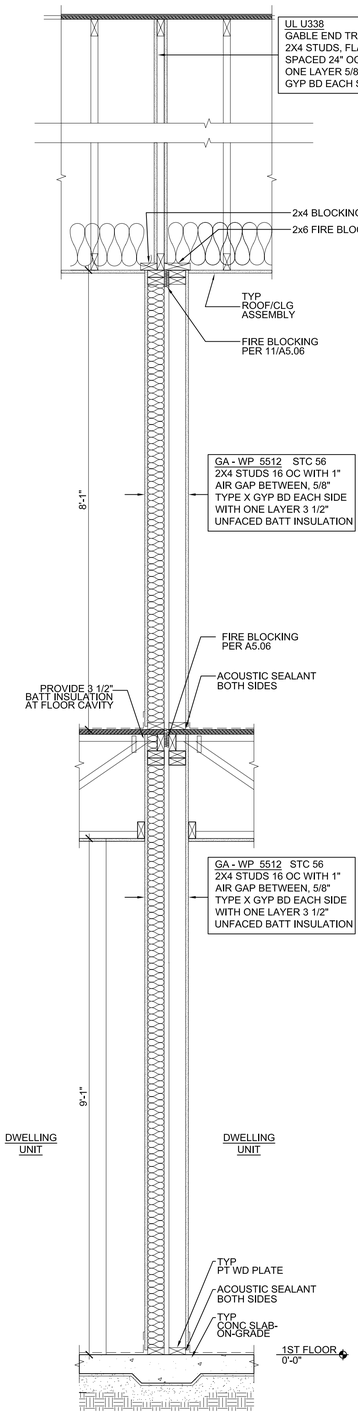

1 2 STORY DWELLING UNIT SEPARATION WALL
3/4" = 1'-0"

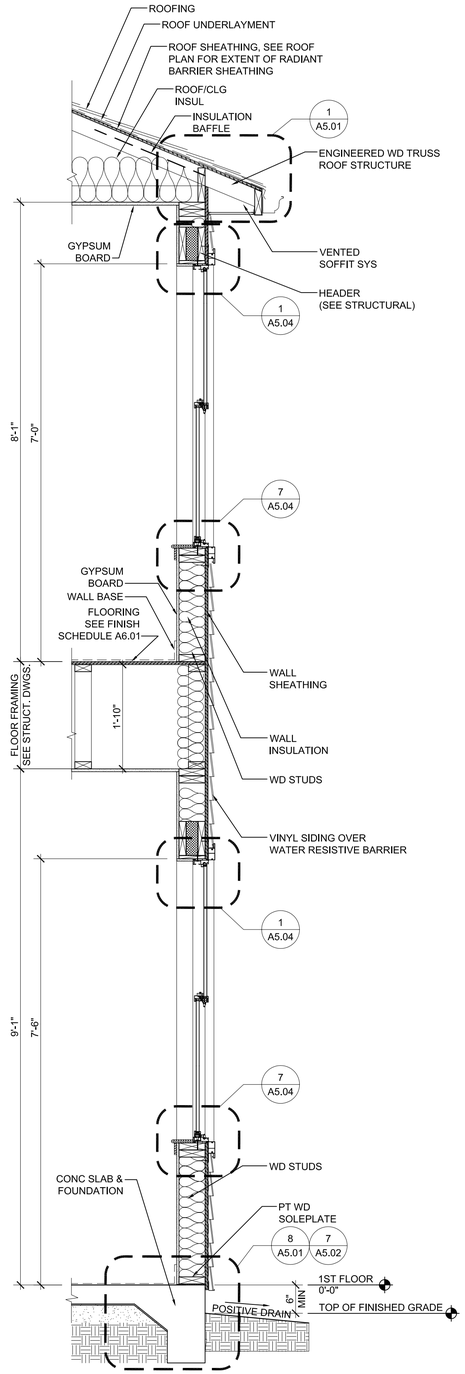

2 TYPICAL EXTERIOR WALL SECTION AT EAVE
3/4" = 1'-0"

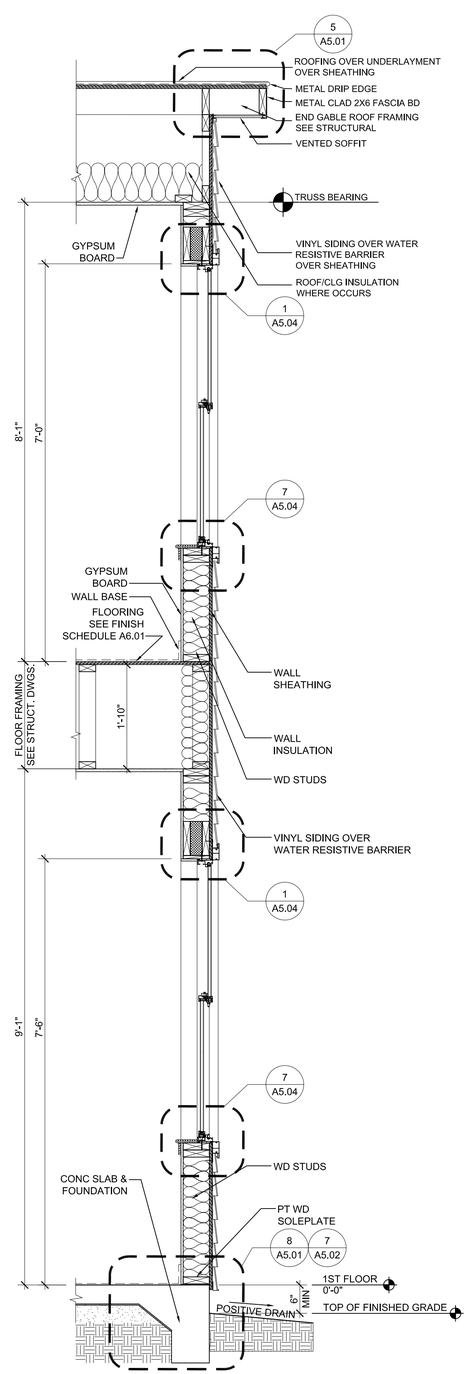

3 TYPICAL EXTERIOR WALL SECTION AT GABLE
3/4" = 1'-0"

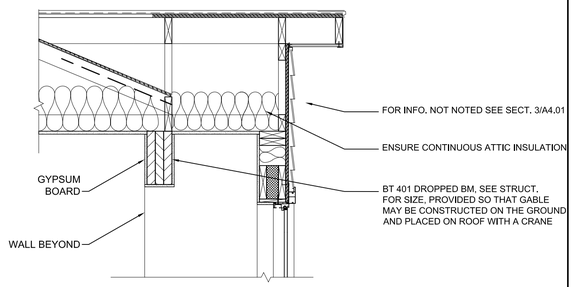

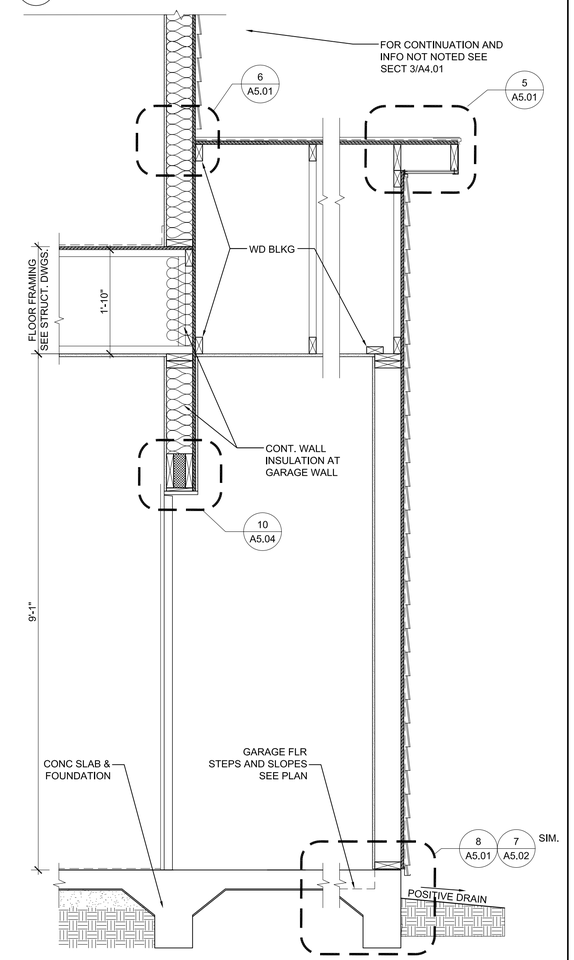

4 TYP EXT WALL SECT AT GABLE W/ DROP'D BM
3/4" = 1'-0"

5 TYP EXTERIOR WALL SECTION AT GARAGE
3/4" = 1'-0"

Atlantic COMMUNITIES
Marine Corps
A Lend Lease Community

INCIDENT & INJURY FREE
SIN LESIÓN O ACCIDENTE
LIVE SAFE WORK SAFE
VIVA SEGURO TRABAJE SEGURO

Actus
Lend Lease

Issue:	Date:
	2/08/2011
	100% SUBMITTAL

GARRISON GROUP ARCHITECTS, INC.
12 EDUCATION WAY
DOVER, NH 03820
603.516.7312
www.ggarcitc.com

CHRISTINE E. CASTALDO
REGISTERED ARCHITECT
11975
NORTH CAROLINA
CHARLOTTE, NC

PHASE 3
50 NEW HOMES AT KNOX LANDING
CAMP LEJEUNE NORTH CAROLINA

WALL SECTIONS

Project No:	10-003
Drawn:	CC
Checked:	MA
Approved:	CC
*Scale:	AS NOTED

*use graphic scales if sheet size varies from 22 x 34

SHEET 18 OF 72

A4.01

C:\Projects\Actus\KP50SNCO\KP50SNCO\Sheets\A4.01 WALL SECTIONS.dwg Feb 08, 2011 - 10:49am

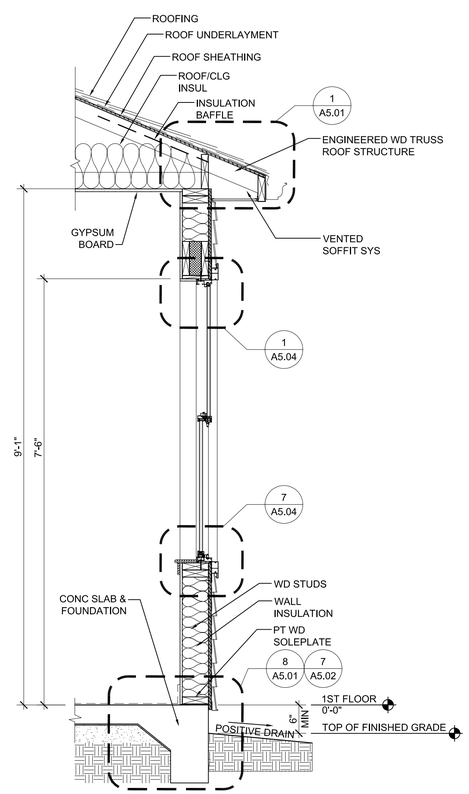

1 **TYP EXT WALL SECT AT SINGLE STORY EAVE**
3/4" = 1'-0"

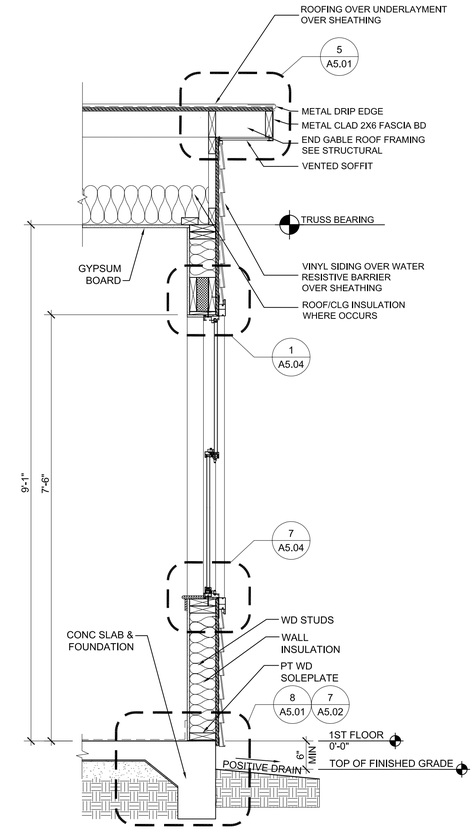

2 **TYP EXT WALL SECT AT SINGLE STORY GABLE**
3/4" = 1'-0"

Atlantic COMMUNITIES
Marine Corps
A Lend Lease Community

INCIDENT & INJURY FREE
SIN LESIÓN O ACCIDENTE

Actus
Lend Lease

Date:	Issue:	Date:	Issue:

100% SUBMITTAL
2/08/2011

GARRISON GROUP ARCHITECTS, INC.
12 EDUCATION WAY
DOVER, NH 03820
603 953 3912
www.ggarcinc.com

CHRISTINE E CASTALDO
REGISTERED ARCHITECT
11975
NORTH CAROLINA
CHARLOTTE, NC

PHASE 3
50 NEW HOMES AT KNOX LANDING
CAMP LEJEUNE NORTH CAROLINA

WALL SECTIONS

Project No:	10-003
Drawn:	CC
Checked:	MA
Approved:	CC
*Scale:	AS NOTED

*use graphic scales if sheet size varies from 22 x 34

SHEET 19 OF 72

A4.02

C:\Projects\Actus\KP50SNCO\KP50SNCO\Sheets\A4.02 WALL SECTIONS.dwg Feb 08, 2011 - 10:50am

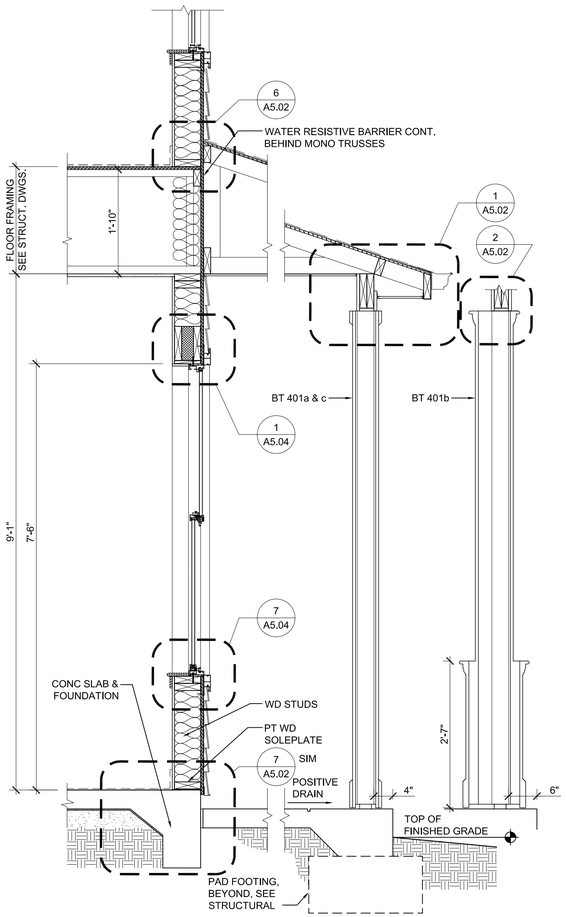

1 TYPICAL FRONT PORCH SECTION
3/4" = 1'-0"

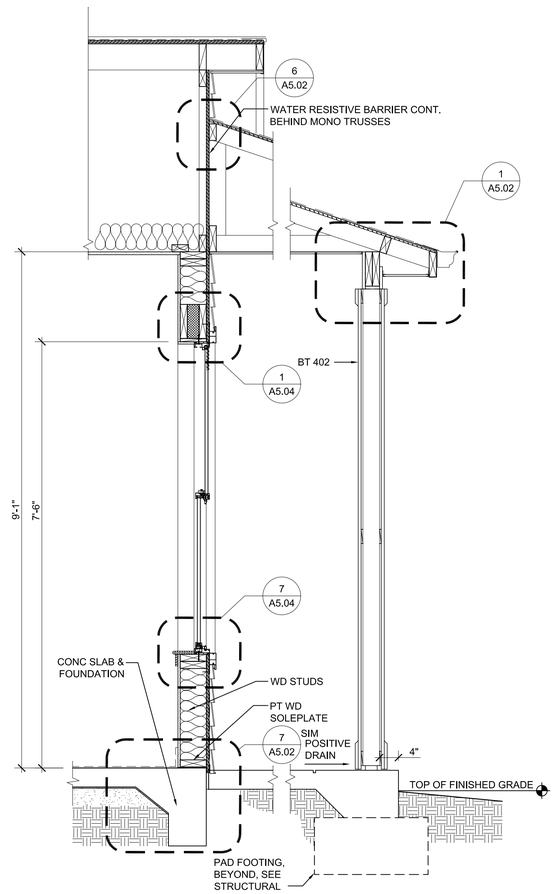

2 FRONT PORCH SECTION AT ADAPTABLE UNITS
3/4" = 1'-0"

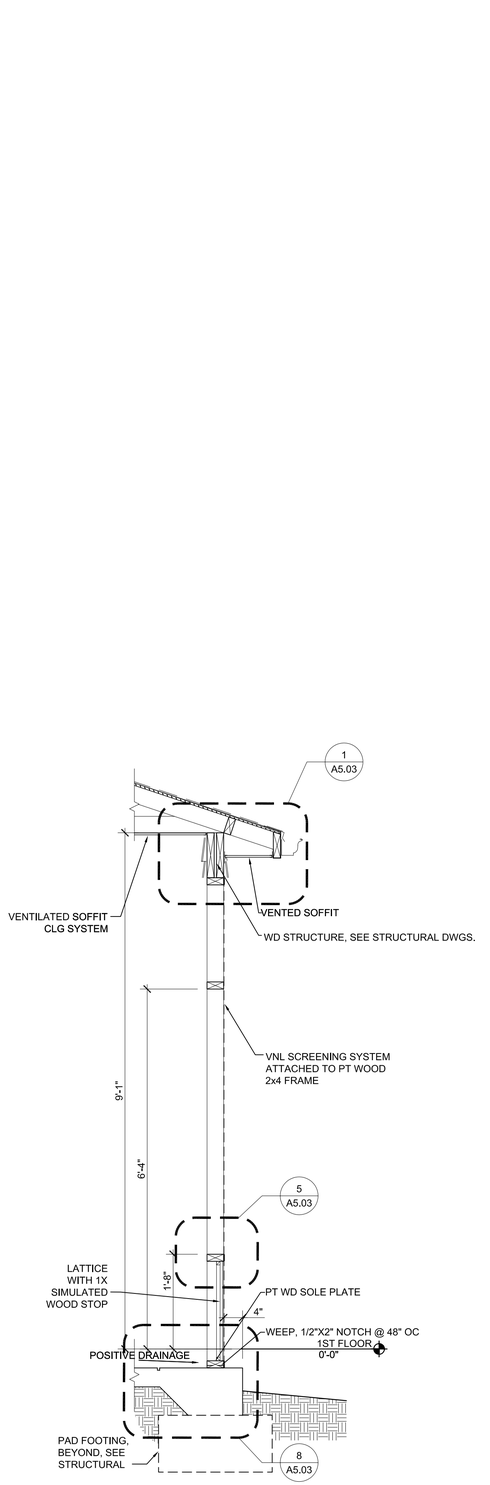

3 TYPICAL SCREEN PORCH SECTION AT EAVE
3/4" = 1'-0"

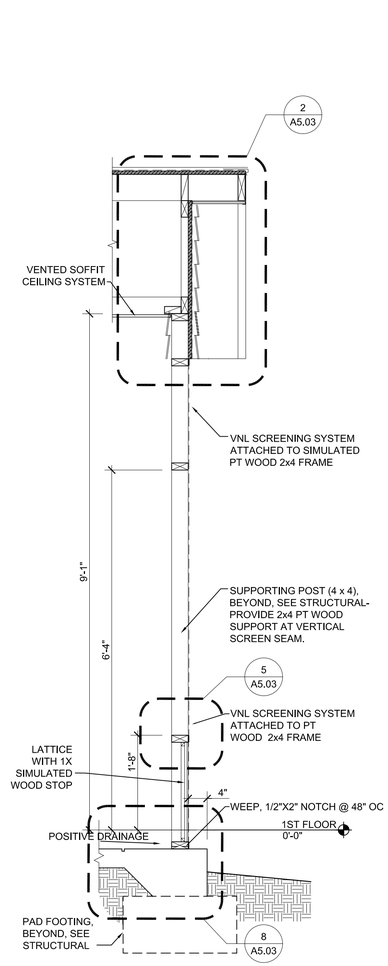

4 TYPICAL SCREEN PORCH SECTION AT GABLE
3/4" = 1'-0"

C:\Projects\Actus\VP50SNCO\VP50SNCO\Sheets\A4.03 WALL SECTIONS.dwg Feb 08, 2011 - 10:51am

Atlantic COMMUNITIES
Marine Corps
A Lend Lease Community

INCIDENT & INJURY FREE
SIN LESIÓN O ACCIDENTE
LIVE SAFE WORK SAFE
VIVA SEGURO TRABAJE SEGURO

Actus
Lend Lease

	Issue:	Date:
100% SUBMITTAL		
2/08/2011		

GARRISON GROUP
ARCHITECTS, INC.
12 EDUCATION WAY
DOVER, NH 03820
(603) 343-3312
www.ggarchitc.com

CHRISTINE E. CASTALDO
REGISTERED ARCHITECT
11975
NORTH CAROLINA
CHARLOTTE, NC

PHASE 3
50 NEW HOMES AT KNOX LANDING
CAMP LEJEUNE NORTH CAROLINA

WALL SECTIONS

Project No:	10-003
Drawn:	CC
Checked:	MA
Approved:	CC
*Scale:	AS NOTED

*use graphic scales if sheet size varies from 22 x 34

SHEET 20 OF 72

A4.03

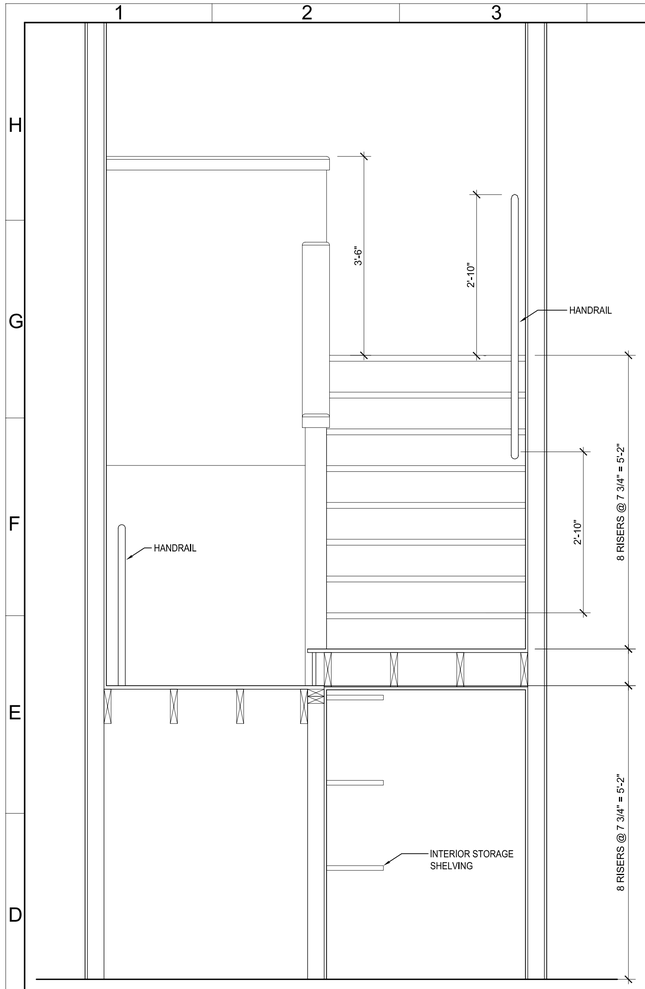

1 **BT 401 STAIR SECTION**
3/4" = 1'-0"

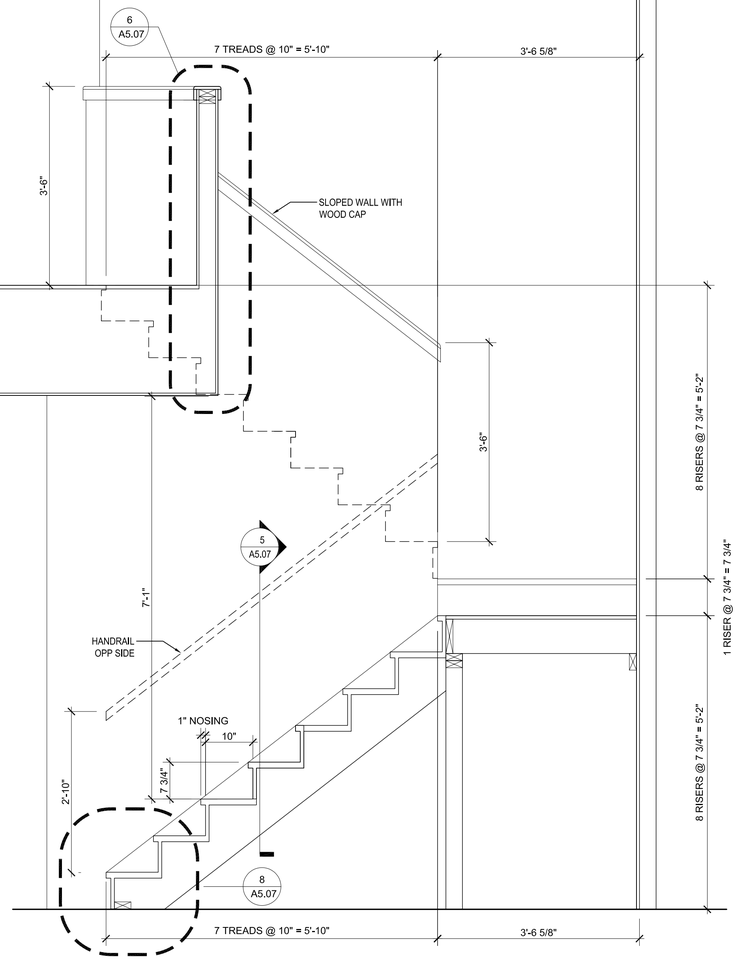

2 **BT 401 STAIR SECTION**
3/4" = 1'-0"

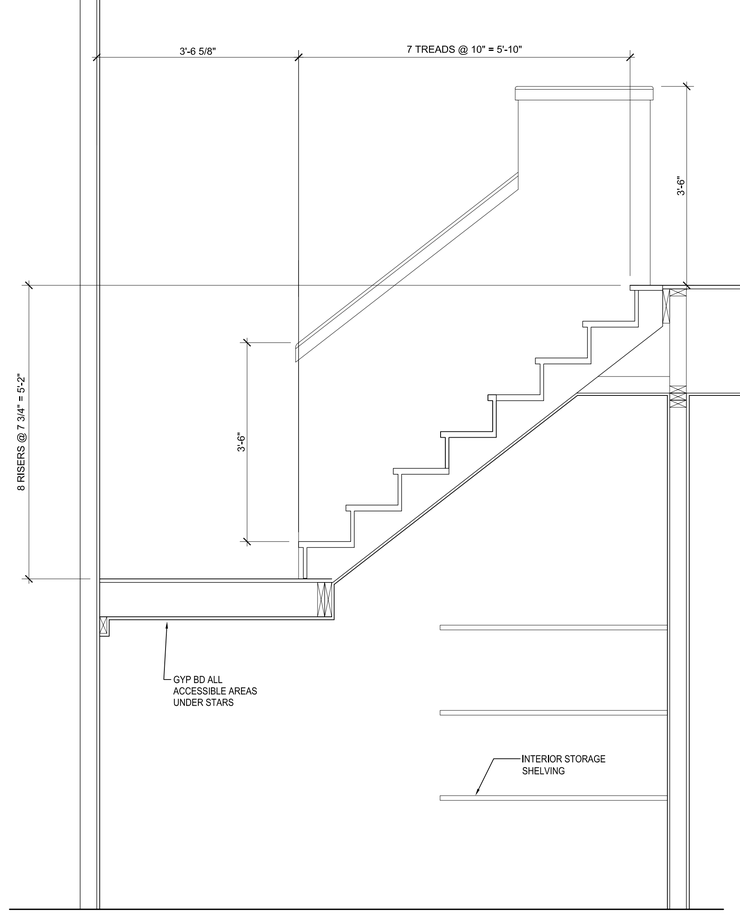

3 **BT 401 STAIR SECTION**
3/4" = 1'-0"

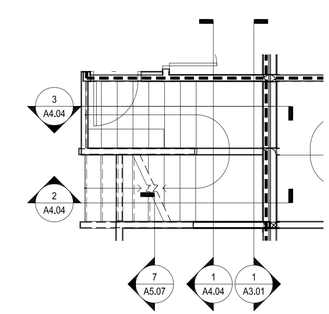

4 **STAIR KEY PLAN**
1/4"=1'-0"

Atlantic COMMUNITIES
Marine Corps
A Lend Lease Community

INCIDENT & INJURY FREE
SIN LESIÓN O ACCIDENTE

Actus
Lend Lease

Date:	Issue:	Date:	Issue:

100% SUBMITTAL
2/08/2011

GARRISON GROUP ARCHITECTS, INC.
12 EDUCATION WAY
DOVER, NH 03820
603 953 3912
www.ggarcinc.com

CHRISTINE E CASTALDO
REGISTERED ARCHITECT
11975
NORTH CAROLINA
CHARLOTTE, NC

PHASE 3
50 NEW HOMES AT KNOX LANDING
CAMP LEJEUNE NORTH CAROLINA

STAIR SECTIONS

Project No:	10-003
Drawn:	CC
Checked:	MA
Approved:	CC
*Scale:	AS NOTED

*use graphic scales if sheet size varies from 22 x 34

SHEET 21 OF 72

A4.04

C:\Projects\Actus\KP50SNCO\KP50SNCO\Sheets\A4.04 STAIR SECTIONS.dwg Feb 08, 2011 - 10:52am

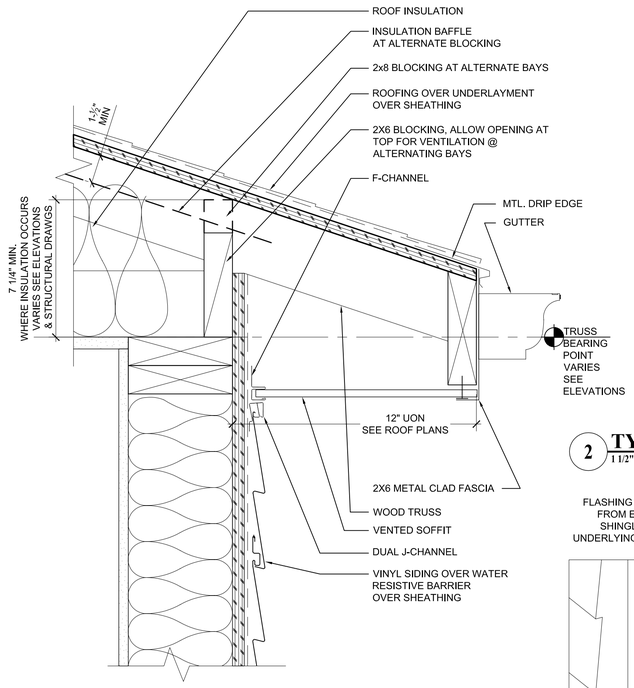

1 TYPICAL EAVE SOFFIT
3" = 1'-0"

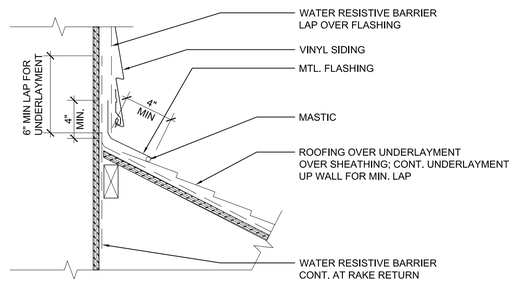

2 TYPICAL HEAD FLASHING
1 1/2" = 1'-0"

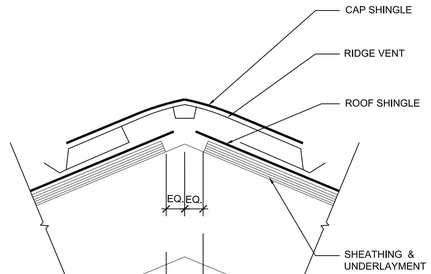

3 TYPICAL RIDGE VENT
3" = 1'-0"

4 NOT USED
1 1/2"=1'-0"

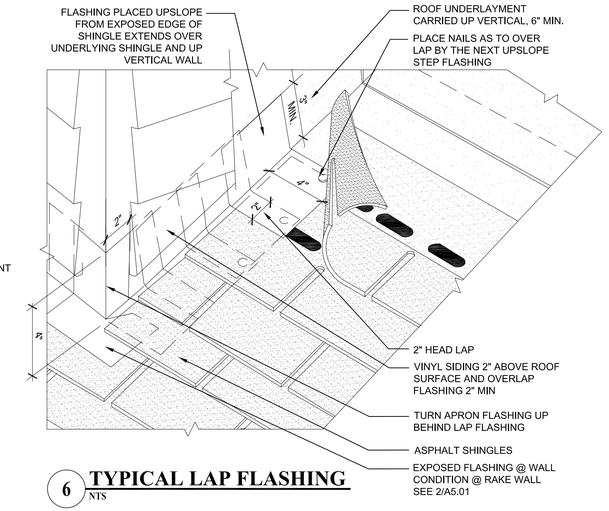

6 TYPICAL LAP FLASHING
NTS

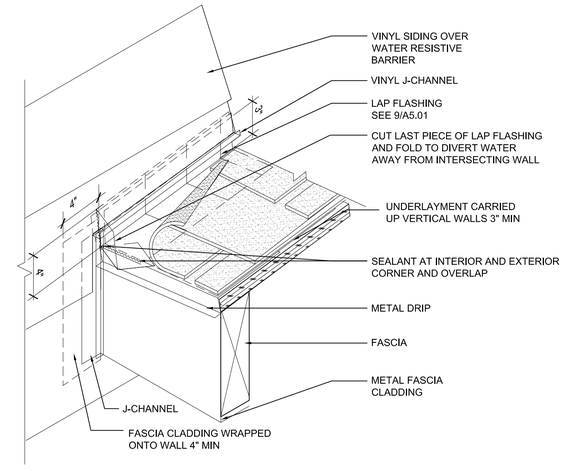

7 TYPICAL RAIN DIVERTER FLASHING
NTS

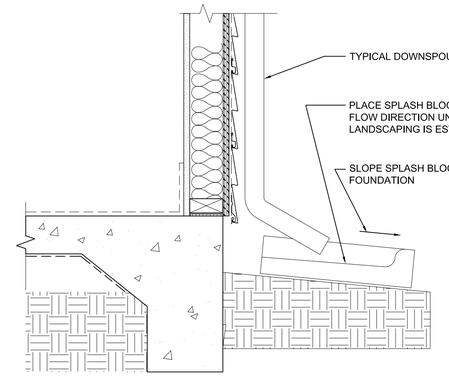

8 TYPICAL SPLASH BLOCK
1 1/2" = 1'-0"

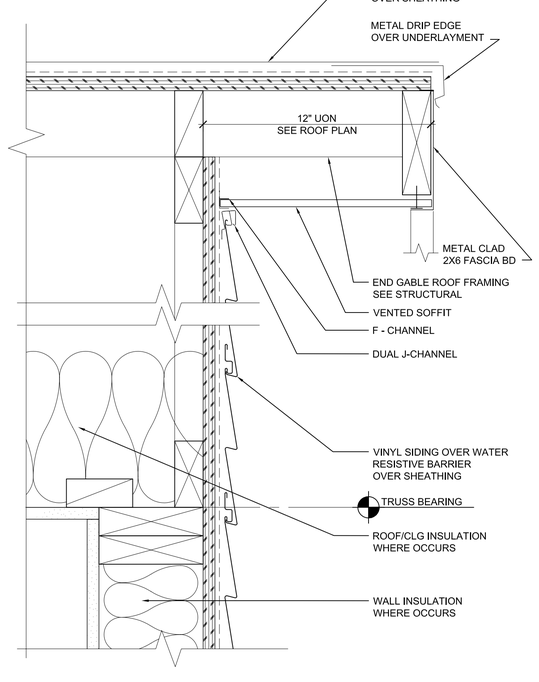

5 TYPICAL GABLE
3" = 1'-0"

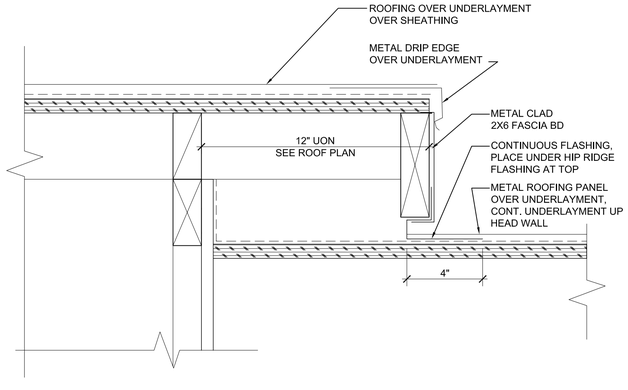

9 TYPICAL RAKE UNDER RAKE
3" = 1'-0"

Atlantic COMMUNITIES
Marine Corps
A Land Lease Community

INCIDENT & INJURY FREE
SIN LESIÓN O ACCIDENTE
LOVE SAFE WORK SAFE
VIVA SEGURO TRABAJE SEGURO

Actus
Lend Lease

	Issue:	Date:

2/08/2011
100% SUBMITTAL

GARRISON GROUP ARCHITECTS, INC.
12 EDUCATION WAY
DOVER, NH 03820
603.516.7323
www.ggarchitects.com

CHRISTINE E CASTALDO
REGISTERED ARCHITECT
11975
NORTH CAROLINA
CHARLOTTE, NC

PHASE 3
50 NEW HOMES AT KNOX LANDING
CAMP LEJEUNE NORTH CAROLINA

ROOF DETAILS

Project No:	10-003
Drawn:	CC
Checked:	MA
Approved:	CC
*Scale:	AS NOTED

*use graphic scales if sheet size varies from 22 x 34

SHEET 22 OF 72

A5.01

C:\Projects\Actus\KP50SNCO\KP50SNCO\Sheets\A5.01 ROOF DETAILS.dwg Feb 08, 2011 - 10:52am

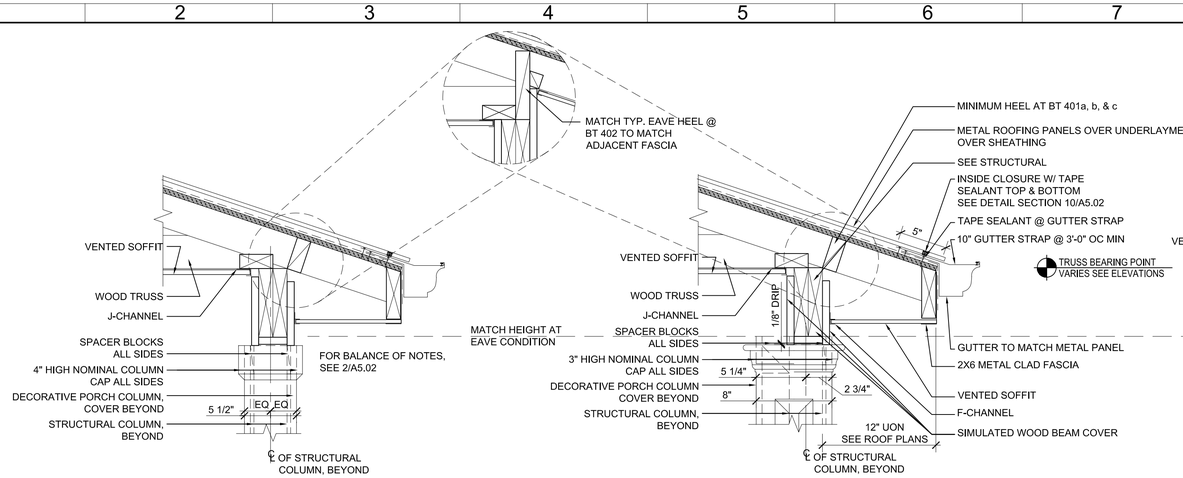

1 TYPICAL FRONT PORCH EAVE
1-1/2" = 1'-0"

2 TYPICAL FRONT PORCH EAVE FOR BT 401b
1-1/2" = 1'-0"

3 TYPICAL FRONT PORCH SIDE HEAD
1 1/2" = 1'-0"

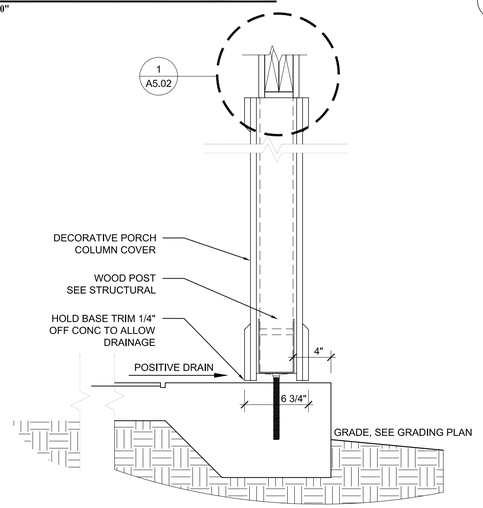

4 TYPICAL FRONT PORCH BASE
1 1/2" = 1'-0"

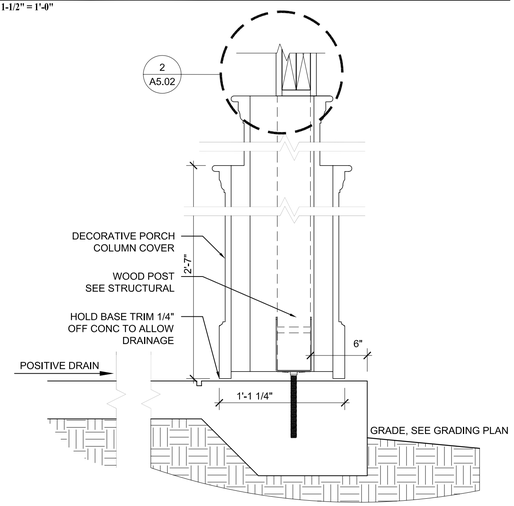

5 TYPICAL FRONT PORCH BASE FOR BT 401b
1 1/2" = 1'-0"

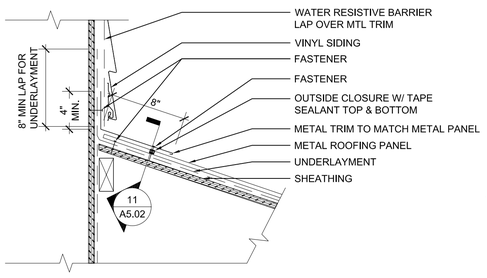

6 TYPICAL HEAD FLASHING @ FRONT PORCH
1 1/2" = 1'-0"

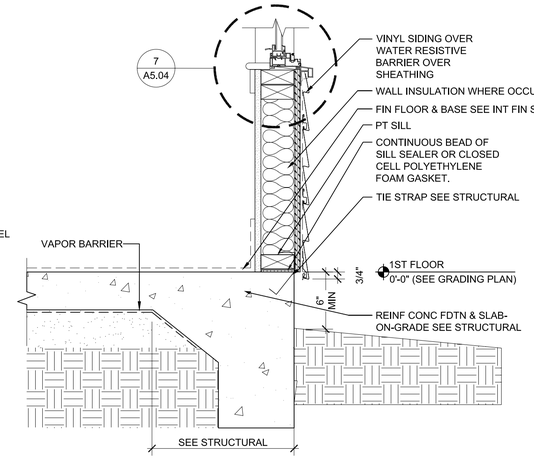

7 TYPICAL BASE SECTION
1 1/2" = 1'-0"

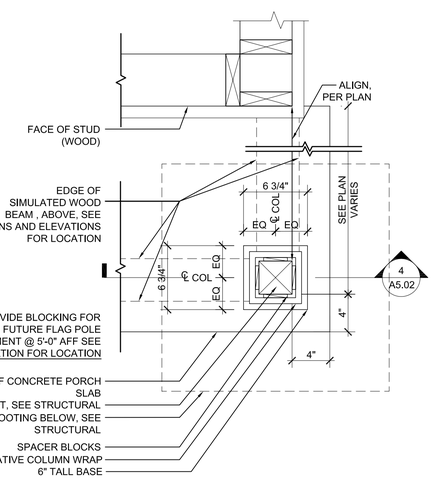

8 FRONT PORCH COLUMN PLAN
1 1/2" = 1'-0"

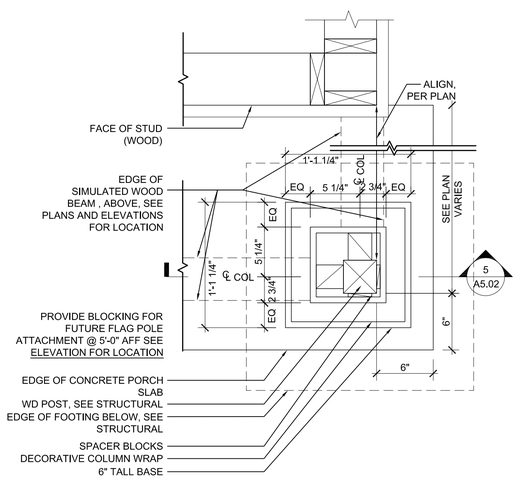

9 FRONT PORCH COLUMN PLAN FOR BT 401b
1 1/2" = 1'-0"

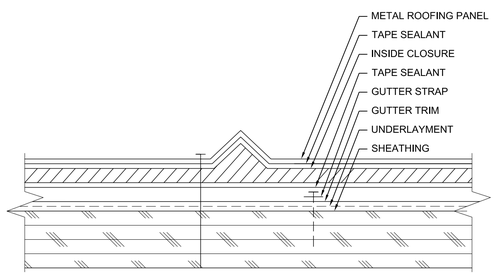

10 METAL ROOFING PANEL EAVE CLOSURE
NTS

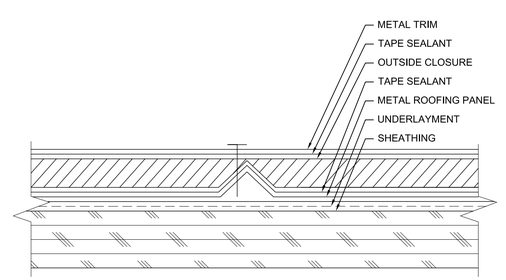

11 METAL ROOFING PANEL HEAD CLOSURE
NTS

Atlantic COMMUNITIES Marine Corps — A Land Lease Community

INCIDENT & INJURY FREE
SIN LESIÓN O ACCIDENTE
LIVE SAFE WORK SAFE — VIVA SEGURO TRABAJE SEGURO

Actus Lend Lease

Date:	Issue:	Date:	Issue:	
				2/08/2011
				100% SUBMITTAL

GARRISON GROUP ARCHITECTS, INC.
12 EDUCATION WAY
DOVER, NH 03820
603 953 3212
www.ggarchc.com

CHRISTINE E CASTALDO
REGISTERED ARCHITECT
11975
NORTH CAROLINA
CHARLOTTE, NC

PHASE 3
50 NEW HOMES AT KNOX LANDING
CAMP LEJEUNE NORTH CAROLINA

EXTERIOR DETAILS

Project No:	10-003
Drawn:	CC
Checked:	MA
Approved:	CC
*Scale:	AS NOTED

*use graphic scales if sheet size varies from 22 x 34

SHEET 23 OF 72

A5.02

C:\Projects\Actus\KP505NC0\KP505NC0\Sheets\A5.02 EXTERIOR DETAILS.dwg Feb 08, 2011 - 10:53am

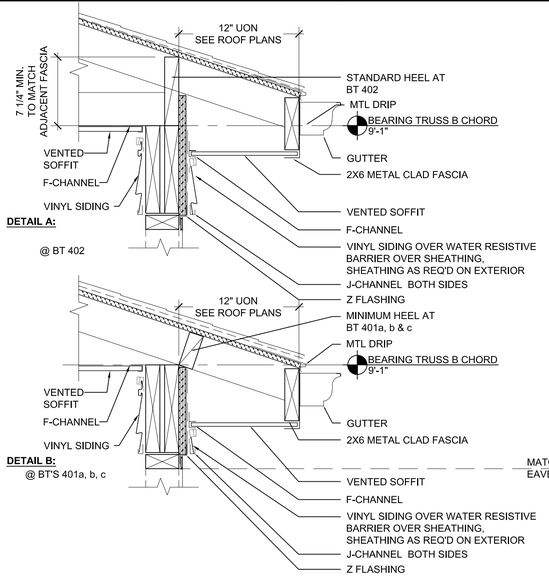

1 TYPICAL SCREEN PORCH EAVE
1 1/2" = 1'-0"

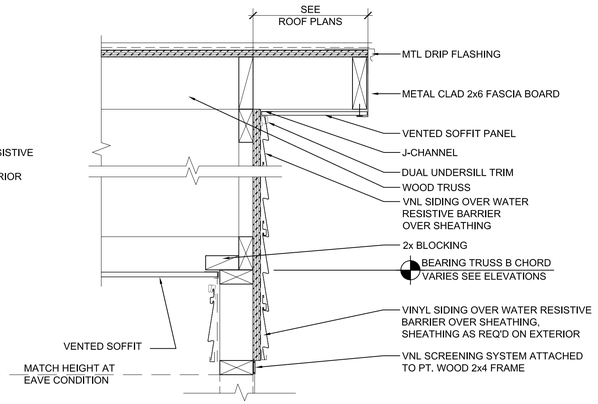

2 TYPICAL SCREEN PORCH SIDE HEAD
1 1/2" = 1'-0"

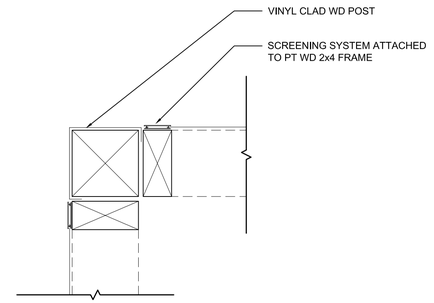

3 TYPICAL SCREEN PORCH CORNER POST
3" = 1'-0"

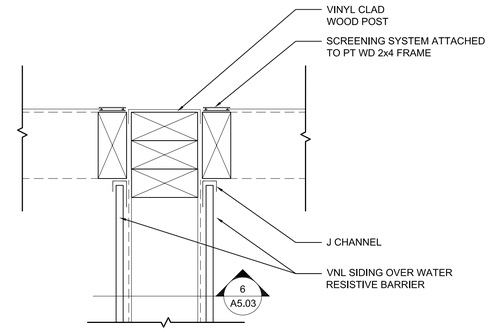

4 SCREEN PORCH TO SCREEN PORCH END WALL
3" = 1'-0"

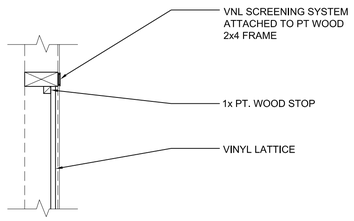

5 SCREEN PORCH MID SECTION
1 1/2" = 1'-0"

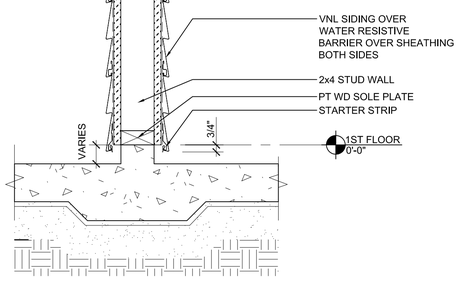

6 SCREEN PORCH TO SCREEN PORCH BASE
1 1/2" = 1'-0"

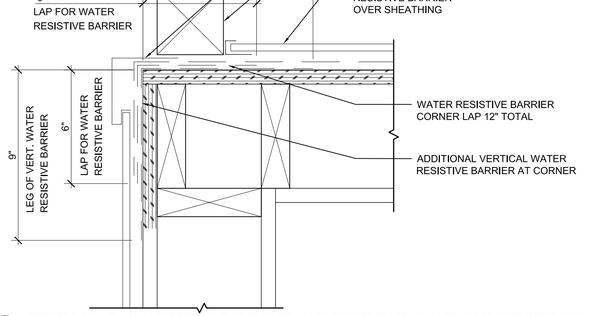

7 TYPICAL SCREEN PORCH CORNER/DOOR CONDITION
3" = 1'-0"

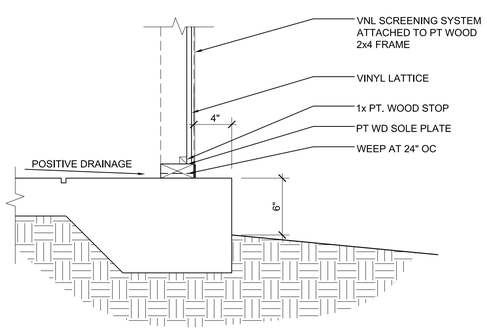

8 SCREEN PORCH BASE SECTION
1 1/2" = 1'-0"

Atlantic COMMUNITIES
Marine Corps
A Lend Lease Community

INCIDENT & INJURY FREE
SIN LESIÓN O ACCIDENTE
LOVE SAFE WORK SAFE
VIVA SEGURO TRABAJE SEGURO

Actus
Lend Lease

Date:	Issue:
Date:	Issue:

2/08/2011
100% SUBMITTAL

GARRISON GROUP
ARCHITECTS, INC.
12 EDUCATION WAY
DOVER, NH 03820
603.743.3212
www.ggarchtc.com

CHRISTINE E. CASTALDO
REGISTERED ARCHITECT
11975
NORTH CAROLINA
CHARLOTTE, NC

PHASE 3
50 NEW HOMES AT KNOX LANDING
CAMP LEJEUNE NORTH CAROLINA

SCREEN PORCH DETAILS

Project No:	10-003
Drawn:	CC
Checked:	MA
Approved:	CC
*Scale:	AS NOTED

*use graphic scales if sheet size varies from 22 x 34

SHEET 24 OF 72

A5.03

C:\Projects\Actus\KP50SNCO\KP50SNCO\Sheets\A5.03 SCREEN PORCH DETAILS.dwg Feb 08, 2011 - 10:54am

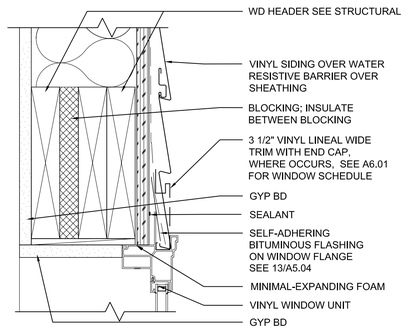

1 TYPICAL WINDOW HEAD DETAIL
3" = 1'-0"

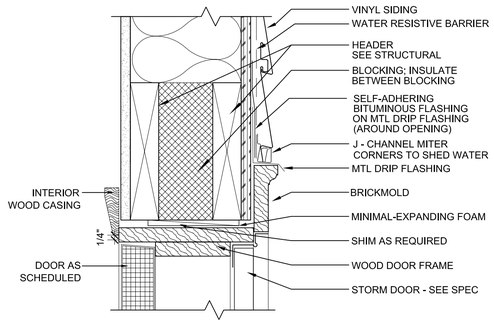

2 TYPICAL DOOR HEAD DETAIL
3" = 1'-0"

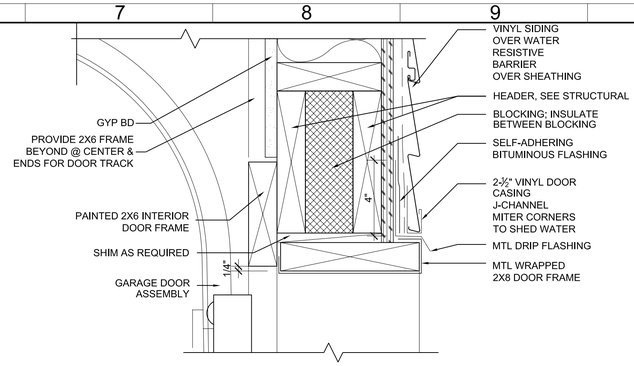

3 TYPICAL GARAGE DOOR HEAD DETAIL
3" = 1'-0"

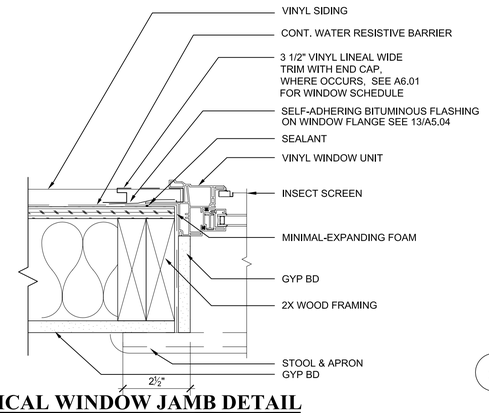

4 TYPICAL WINDOW JAMB DETAIL
3" = 1'-0"

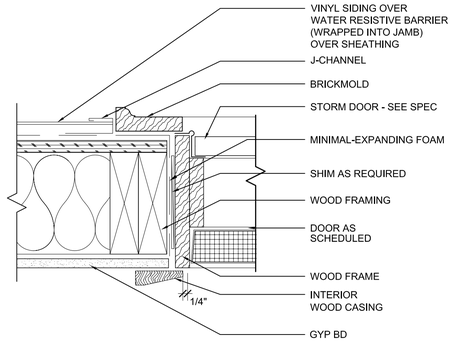

5 TYPICAL DOOR JAMB DETAIL
3" = 1'-0"

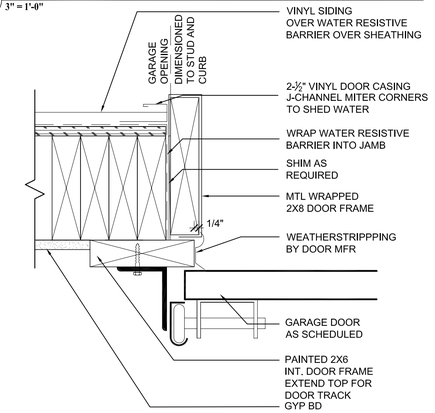

6 TYPICAL GARAGE DOOR JAMB DETAIL
3" = 1'-0"

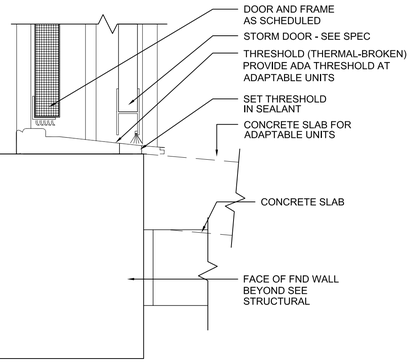

7 TYPICAL WINDOW SILL DETAIL
3" = 1'-0"

8 TYPICAL DOOR SILL DETAIL
3" = 1'-0"

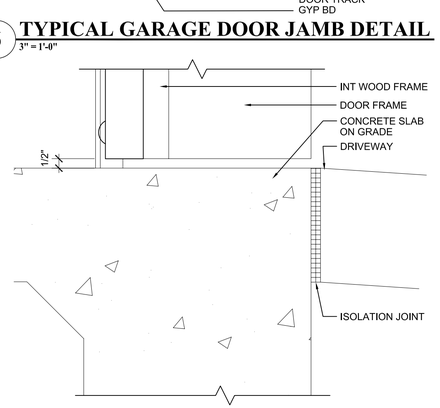

9 TYPICAL GARAGE DOOR SILL DETAIL
3" = 1'-0"

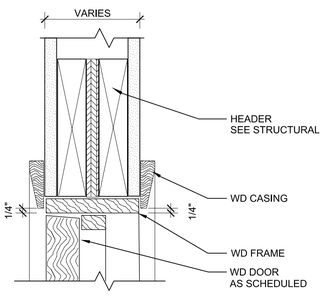

10 TYPICAL INTERIOR DOOR HEAD DETAIL
3" = 1'-0"

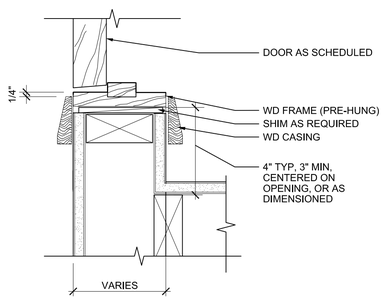

11 TYPICAL INTERIOR DOOR JAMB DETAIL
3" = 1'-0"

12 NOT USED
NTS

1. CUT A DIAGONAL SLIT IN THE WATER RESISTIVE BARRIER AT THE TOP CORNERS OF THE ROUGH WINDOW OPENINGS. SLITS SHOULD EXTEND ABOVE THE TOP OF THE OPENING BY THE WIDTH OF THE FLASHING TO BE USED. FOLD THIS FLAP UP AND SECURE TEMPORARILY WITH TAPE.

2. CUT STRIPS OF SELF-ADHERING BITUMINOUS FLASHING THAT ARE LONG ENOUGH TO EXTEND PAST THE EDGES OF THE ROUGH OPENING ON BOTH SIDES BY A LITTLE LESS THAN THE WIDTH OF THE SIDE (JAMB) FLASHING TO BE INSTALLED IN STEP 4. START WITH INITIAL STRIPS ALONG THE BOTTOM EDGE OF THE ROUGH OPENING. PEEL BACK ABOUT 4 - 6 INCHES OF RELEASE PAPER AND STICK THIS IN PLACE AT ONE SIDE OF THE OPENING. USING RELEASE PAPER AS A GUIDE SLOWLY PEEL BACK THE RELEASE PAPER AND PRESS SELF-ADHERING BITUMINOUS FLASHING IN PLACE.

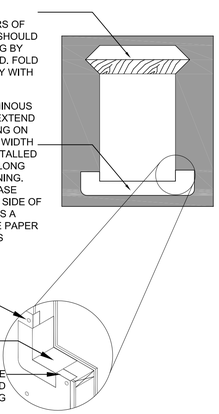

3. APPLY A CONTINUOUS BEAD OF SEALANT AROUND THE INTERIOR EDGE OF THE WINDOW'S NAILING FLANGE AT, OR JUST INSIDE, THE MANUFACTURER'S NAILING SLOTS OR HOLES. A CONTRACTOR'S GRADE OF URETHANE SEALANT, OR A POLYURETHANE -BASED GENERAL-PURPOSE SEALANT SHOULD BE USED TO INSURE A GOOD SEAL AND COMPATABILITY. MOUNT AND FASTEN THE WINDOW IN PLACE ACCORDINING TO WINDOW MANUFACTURER'S INSTRUCTIONS.

4. CUT TWO STRIPS FOR SIDES (JAMBS) OF THE WINDOW, BUT DO NOT EXTEND PAST THE WIDTH OF THE FLASHING TO BE INSTALLED AT THE HEAD OF THE WINDOW. START AT THE TOP ON ONE SIDE BY PEELING BACK 4 - 6 INCHES OF RELEASE PAPER AND STICKING IN PLACE. USING RELEASE PAPER TO HELP GUIDE FLASHING, SLOWLY PEEL RELEASE PAPER OFF AS YOU PRESS FLASHING IN PLACE. INSURE FLASHING COVERS ALL FASTENERS AND MOUNTING SLOTS ON THE WINDOW MOUNTING.

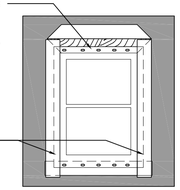

5. NEXT, CUT A PIECE OF FLASHING FOR THE HEAD OF THE WINDOW THAT WILL EXTEND BEYOND BOTH STRIPS OF JAMB FLASHING AND PAST THE ENDS OF THE DIAGONAL SLITS CUT IN THE WATER RESISTIVE BARRIER IN STEP 1. PEEL BACK 4 - 6 INCHES OF RELEASE PAPER TO HELP GUIDE FLASHING, SLOWLY RELEASE PAPER OFF AS YOU PRESS FLASHING IN PLACE. INSURE FLASHING COVERS ALL FASTENERS AND SLOTS ON THE WINDOW'S MOUNTING FLANGE AS THE TOP ENDS OF THE SIDE (JAMB) FLASHING.

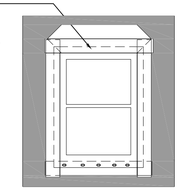

6. FINALLY, FOLD THE WATER RESISTIVE BARRIER FLAP (FROM STEP 1) OVER THE HEAD FLASHING AND TAPE THE DIAGONAL EDGES TO THE SELF-ADHERING BITUMINOUS FLASHING WITH CONSTRUCTION TAPE.

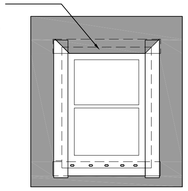

13 DETAIL AT WINDOW FLASHING
NTS

Atlantic COMMUNITIES
Marine Corps
A Land Lease Community

INCIDENT & INJURY FREE
SIN LESIÓN O ACCIDENTE
LIVE SAFE WORK SAFE
VIVA SEGURO TRABAJE SEGURO

Actus
Lend Lease

	Issue:	Date:	Issue:	Date:
				2/08/2011

100% SUBMITTAL

GARRISON GROUP ARCHITECTS, INC.
12 EDUCATION WAY
DOVER, NH 03820
603 . 953 . 2312
www.ggarchc.com

CHRISTINE E. CASTALDO
REGISTERED ARCHITECT
11975
NORTH CAROLINA
CHARLOTTE, NC

PHASE 3
50 NEW HOMES AT KNOX LANDING
CAMP LEJEUNE NORTH CAROLINA

TYPICAL WINDOW AND DOOR DETAILS

Project No:	10-003
Drawn:	CC
Checked:	MA
Approved:	CC
*Scale:	AS NOTED

*use graphic scales if sheet size varies from 22 x 34

SHEET 25 OF 72

A5.04

C:\Projects\Actus\VP50SNCO\VP50SNCO\Sheets\A5.04 TYPICAL WINDOW AND DOOR DETAILS.dwg Feb 08, 2011 - 10:55am

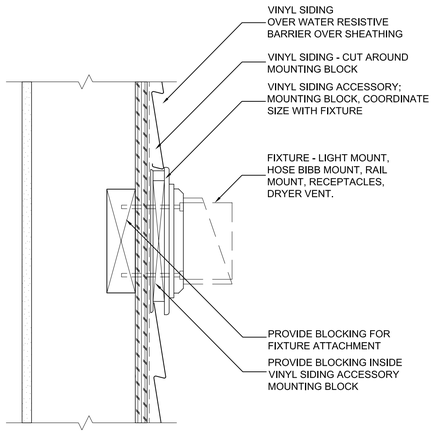

1 TYPICAL FIXTURE MOUNTING
3" = 1'-0"

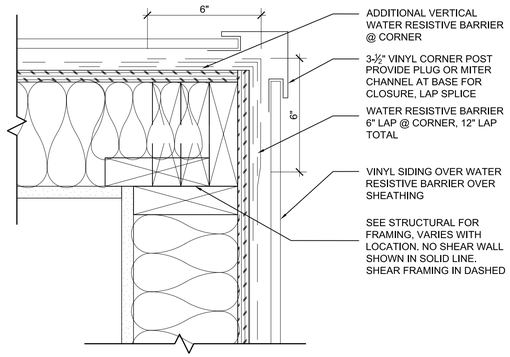

2 PLAN - TYPICAL OUTSIDE VINYL CORNER
3" = 1'-0"

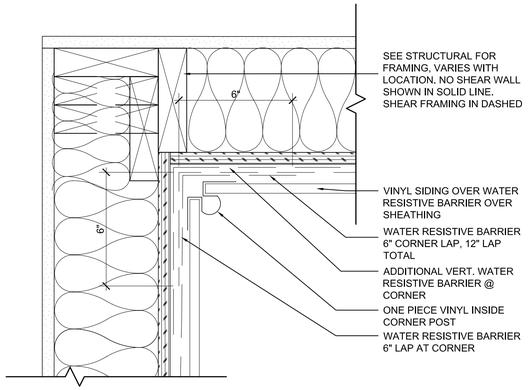

3 PLAN - TYPICAL INSIDE VINYL CORNER
3" = 1'-0"

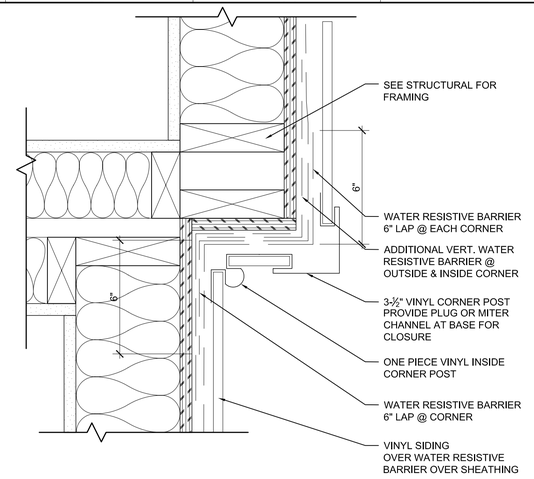

4 PLAN - TYPICAL OFFSET VINYL CORNER
3" = 1'-0"

5 VINYL LINEAL AT SIDING TRANSITION
3" = 1'-0"

6 TYPICAL EXTERIOR WALL PENETRATION DETAIL
3" = 1'-0"

Atlantic COMMUNITIES
Marine Corps
A Land Lease Community

INCIDENT & INJURY FREE
SIN LESIÓN O ACCIDENTE
LIVE SAFE WORK SAFE
VIVA SEGURO TRABAJE SEGURO

Actus
Lend Lease

	Date:	Issue:
100% SUBMITTAL	2/08/2011	

GARRISON GROUP
ARCHITECTS, INC.
12 EDUCATION WAY
DOVER, NH 03820
603.553.3312
www.ggarchitects.com

CHRISTINE E CASTALDO
REGISTERED ARCHITECT
11975
NORTH CAROLINA
CHARLOTTE, NC

PHASE 3
50 NEW HOMES AT KNOX LANDING
CAMP LEJEUNE NORTH CAROLINA

EXTERIOR DETAILS

Project No:	10-003
Drawn:	CC
Checked:	MA
Approved:	CC
*Scale:	AS NOTED

*use graphic scales if sheet size varies from 22 x 34

SHEET 26 OF 72

A5.05

C:\Projects\Actus\KP50SNCO\KP50SNCO\Sheets\A5.05 EXTERIOR DETAILS.dwg Feb 08, 2011 - 10:56am

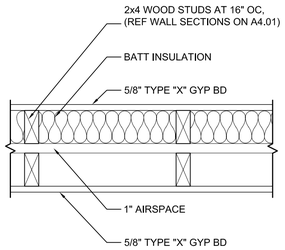

1 ONE HOUR RATED DWELLING UNIT SEPARATION WALL — GA WP5512 STC 56 (NAIMA)

1 1/2" = 1'-0"

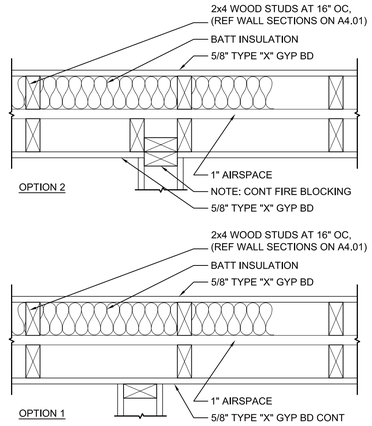

2 ONE HOUR RATED DWELLING UNIT SEPARATION WALL AT INTERIOR INTERSECTION — GA WP5512 STC 56 (NAIMA)

1 1/2" = 1'-0"

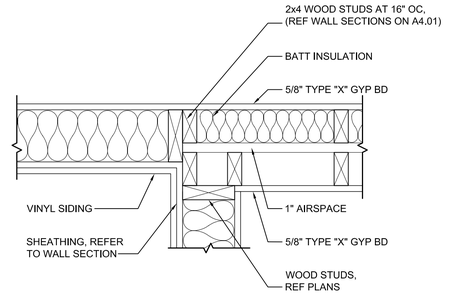

3 ONE HOUR RATED DWELLING UNIT SEPARATION WALL AT EXTERIOR INTERSECTION — GA WP5512 STC 56 (NAIMA)

1 1/2" = 1'-0"

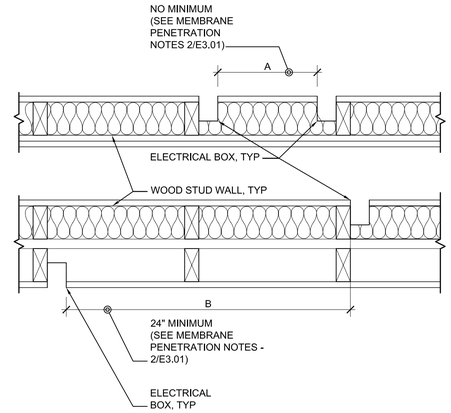

4 ELECTRICAL BOX PENETRATION DETAIL

1 1/2" = 1'-0"

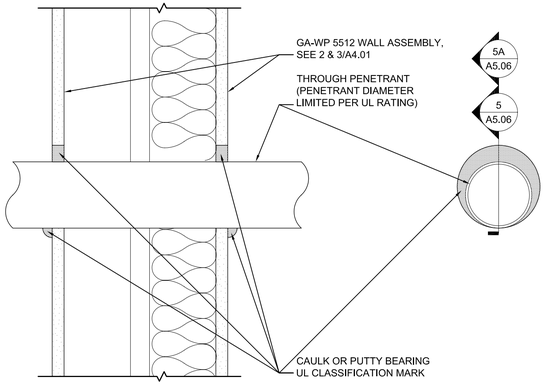

5 NON-METALLIC PIPE PENETRATION DETAIL — UL - W-L-2088

3" = 1'-0"

UL - W-L-1146

5a METALLIC PIPE PENETRATION DETAIL

3" = 1'-0"

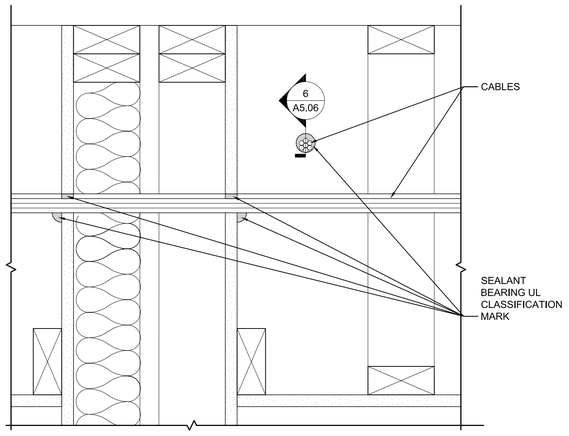

6 CABLE PENETRATION DETAIL — UL - W-L-3076

3" = 1'-0"

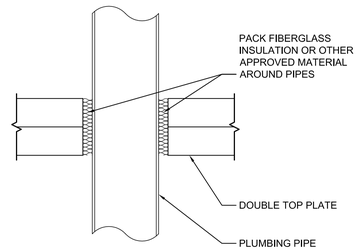

7 FIRE BLOCKING AT PIPE PENETRATION AT PLATE/FLOOR LINE

3" = 1'-0"

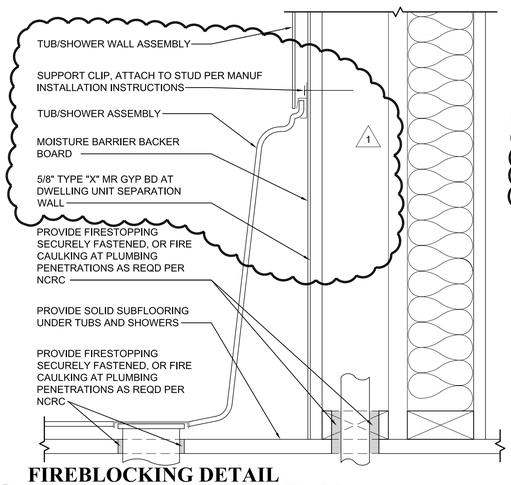

8 FIREBLOCKING DETAIL AT BATHTUB AT RATED WALL

3" = 1'-0"

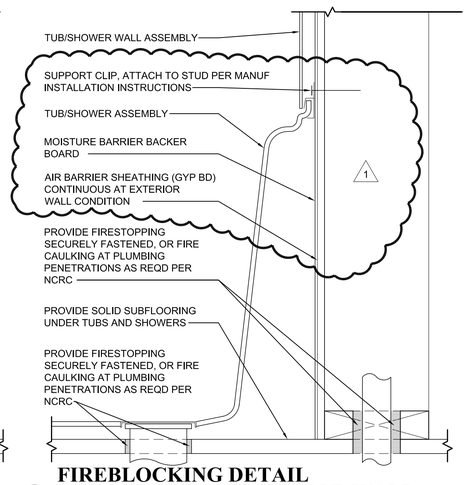

9 FIREBLOCKING DETAIL AT BATHTUB AT EXTERIOR WALL

3" = 1'-0"

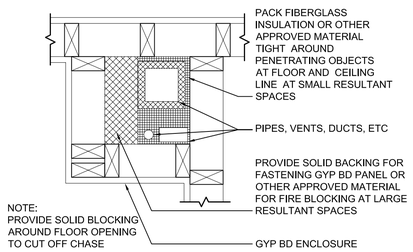

10 FIREBLOCKING DETAIL AT VERTICAL CHASE

1 1/2" = 1'-0"

11 FIREBLOCKING NOTES

NTS

NOTE: CONTRACTOR SHALL BE RESPONSIBLE FOR CONSTRUCTING FIRE RATED ASSEMBLY PER TESTING AGENCY DESCRIPTION.

PROVIDE FIREBLOCKING PER R602.8 NCRC 2006

R602.8 FIRE BLOCKING REQUIRED. FIRE BLOCKING SHALL BE PROVIDED TO CUT OFF ALL CONCEALED DRAFT OPENINGS (BOTH VERTICAL AND HORIZONTAL) AND TO FORM AN EFFECTIVE FIRE BARRIER BETWEEN STORIES, AND BETWEEN A TOP STORY AND THE ROOF SPACE. FIRE BLOCKING SHALL BE PROVIDED IN WOOD-FRAME CONSTRUCTION IN THE FOLLOWING LOCATIONS:

1. IN CONCEALED SPACES OF STUD WALLS AND PARTITIONS, INCLUDING FURRED SPACES AND PARALLEL ROWS OF STUDS OR STAGGERED STUDS; AS FOLLOWS:
   1.1. VERTICALLY AT THE CEILING AND FLOOR LEVELS.
   1.2 HORIZONTALLY AT INTERVALS NOT EXCEEDING 10 FEET.

2. AT ALL INTERCONNECTIONS BETWEEN CONCEALED VERTICAL AND HORIZONTAL SPACES SUCH AS OCCUR AT SOFFITS, DROP CEILINGS AND COVE CEILINGS.

3. IN CONCEALED SPACES BETWEEN STAIR STRINGERS AT THE TOP AND BOTTOM OF THE RUN. ENCLOSED SPACES UNDER STAIRS SHALL COMPLY WITH SECTION NCRC R311.2.2.

4. AT OPENINGS AROUND VENTS, PIPES, AND DUCTS AT CEILING AND FLOOR LEVEL, WITH AN APPROVED MATERIAL TO RESIST THE FREE PASSAGE OF FLAME AND PRODUCTS OF COMBUSTION.

5. FOR THE FIRE BLOCKING OF CHIMNEYS AND FIREPLACES, SEE SECTION R1001.16.

6. FIRE BLOCKING OF CORNICES OF A TWO-FAMILY DWELLING IS REQUIRED AT THE LINE OF DWELLING UNIT SEPARATION.

Atlantic COMMUNITIES Marine Corps — A Lend Lease Community

INCIDENT & INJURY FREE
SIN LESIÓN O ACCIDENTE

LOVE SAFE WORK SAFE — VIVA SEGURO TRABAJE SEGURO

Actus Lend Lease

Issue:	Date:
100% SUBMITTAL	2/8/2011
1 BULLETIN NO. 1	5/17/2011

GARRISON GROUP ARCHITECTS, INC.
12 EDUCATION WAY
DOVER, NH 03820
603 743 3312
www.ggarchitects.com

CHRISTINE E CASTALDO — REGISTERED ARCHITECT — 11975 — NORTH CAROLINA — CHARLOTTE, NC

PHASE 3
50 NEW HOMES AT KNOX LANDING
CAMP LEJEUNE NORTH CAROLINA

FIRE PROTECTION DETAILS

Project No:	10-003
Drawn:	CC
Checked:	MA
Approved:	CC
*Scale:	AS NOTED

*use graphic scales if sheet size varies from 22 x 34

SHEET 27 OF 72

A5.06

C:\Projects\Actus\KP50SNC0\KP50SNC0\Sheets\A5.06 FIRE PROTECTION DETAILS.dwg May 11, 2011 - 6:12pm

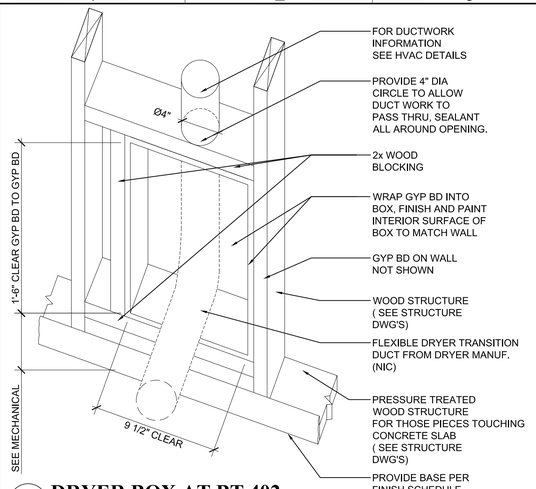

1 DRYER BOX AT BT 402
1 1/2" = 1'-0"

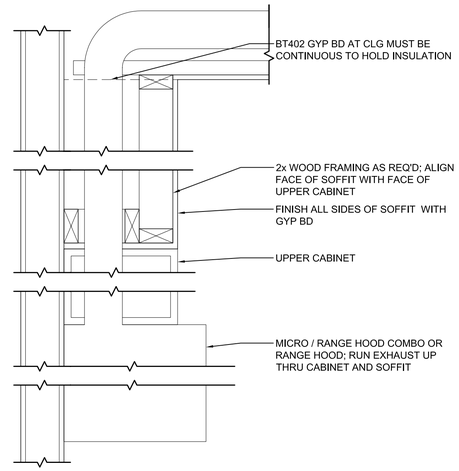

2 RANGE HOOD SOFFIT DETAIL
1 1/2"=1'-0"

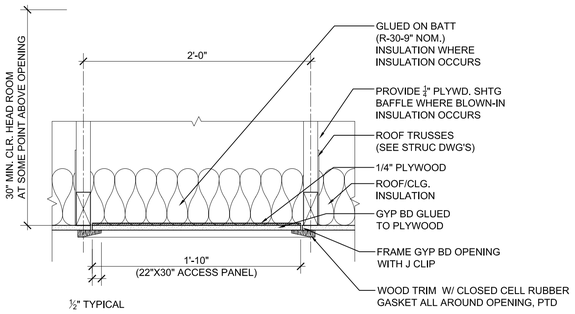

3 ATTIC ACCESS PANEL
1 1/2" = 1'-0"

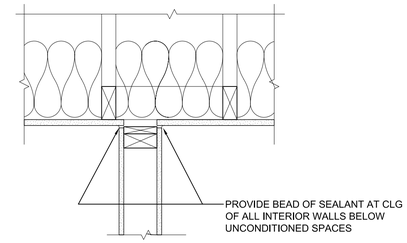

4 SEALANT AT INTERIOR WALLS

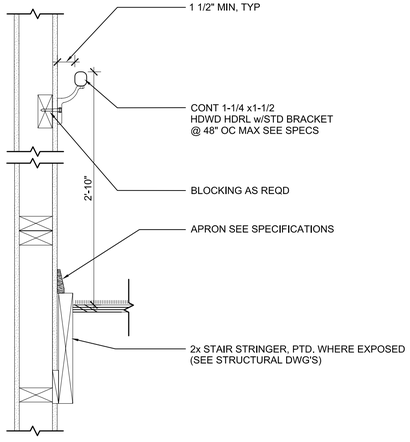

5 STAIR SECTION AT WALL
1 1/2" = 1'-0"

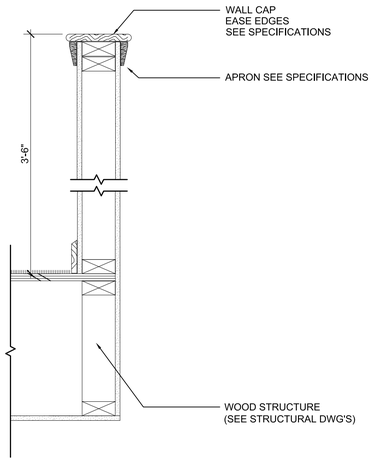

6 TOP RAILING SECTION
1 1/2" = 1'-0"

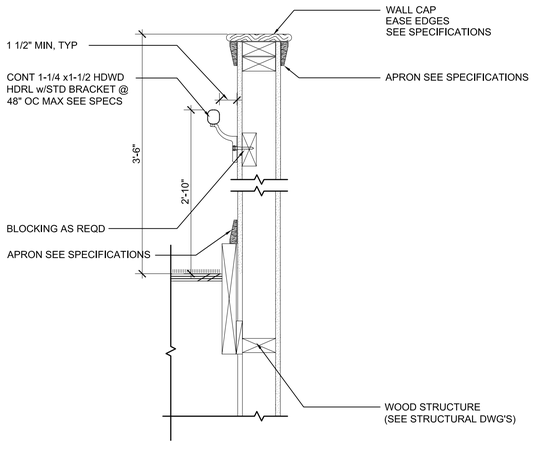

7 HANDRAIL AT SLOPING HALF WALL
1 1/2" = 1'-0"

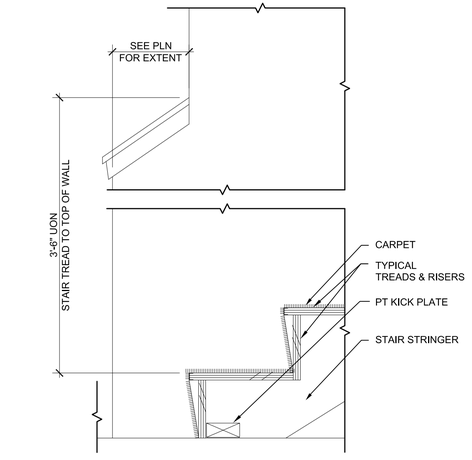

8 STAIR BASE DETAIL
1 1/2" = 1'-0"

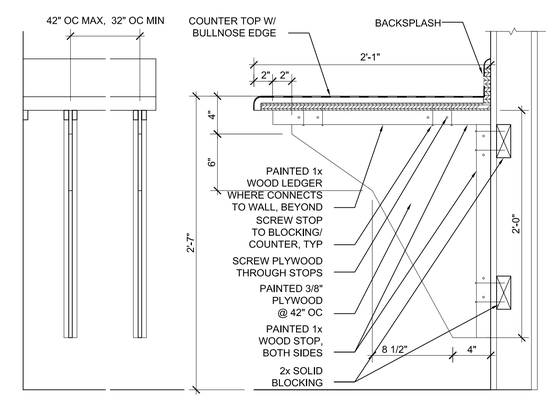

9 UTILITY COUNTER IN LAUNDRY ROOM
1 1/2" = 1'-0"

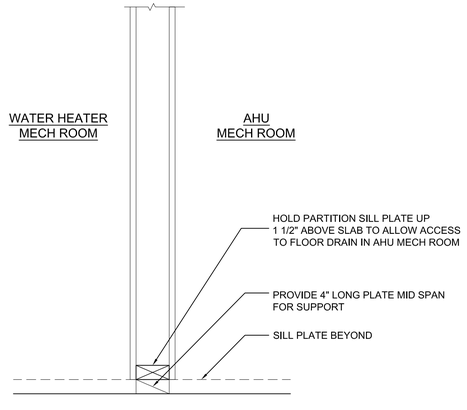

10 MECH ROOM PARTITION WALL
1 1/2" = 1'-0"

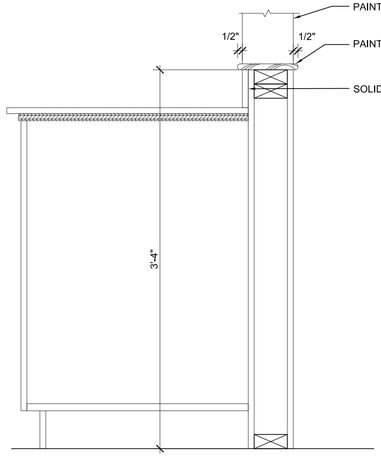

11 OPENING AT KITCHEN SINK
1 1/2" = 1'-0"

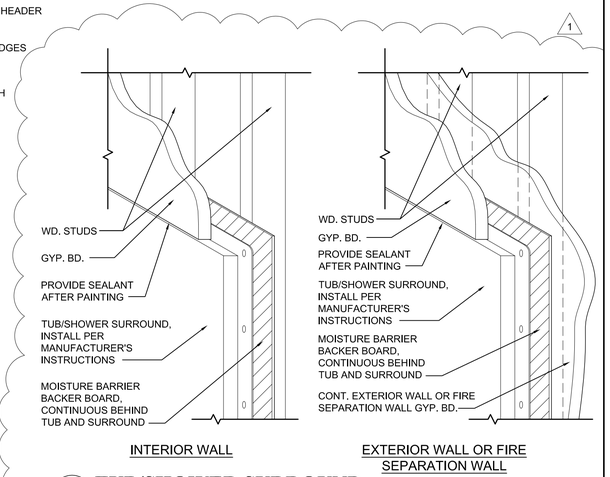

12 TUB/SHOWER SURROUND
NTS

Atlantic COMMUNITIES
Marine Corps
A Land Lease Community

INCIDENT & INJURY FREE
SIN LESIÓN O ACCIDENTE
LIVE SAFE WORK SAFE
VIVA SEGURO TRABAJE SEGURO

Actus Lend Lease

GARRISON GROUP ARCHITECTS, INC.
12 EDUCATION WAY
DOVER, NH 03820
603 953 2812
www.ggarchitc.com

Date:	Issue:
2/8/2011	100% SUBMITTAL
5/17/2011	BULLETIN NO. 1

CHRISTINE E CASTALDO
REGISTERED ARCHITECT
11975
NORTH CAROLINA
CHARLOTTE, NC

PHASE 3
50 NEW HOMES AT KNOX LANDING
CAMP LEJEUNE NORTH CAROLINA

INTERIOR DETAILS

Project No:	10-003
Drawn:	CC
Checked:	MA
Approved:	CC
*Scale:	AS NOTED

*use graphic scales if sheet size varies from 22 x 34

SHEET 28 OF 72

A5.07

C:\Projects\Actus\KP50SNCO\KP50SNCO\Sheets\A5.07 INTERIOR DETAILS.dwg May 11, 2011 - 6:11pm

FINISH SCHEDULE					
SPACE	FLOOR	WALLS	CEILING	TRIM	REMARKS
LINEN (HALL)	CPT-1	PNT-1	PNT-1	BM/PNT-2	
MASTER BEDROOM	CPT-1	PNT-1	PNT-1	BM/PNT-2	
MASTER CLOSET	CPT-1	PNT-1	PNT-1	BM/PNT-2	
UPPER LEVEL HALLWAY	CPT-1	PNT-1	PNT-1	BM/PNT-2	
BEDROOM 2	CPT-1	PNT-1	PNT-1	BM/PNT-2	
BEDROOM 3	CPT-1	PNT-1	PNT-1	BM/PNT-2	
BEDROOM 4	CPT-1	PNT-1	PNT-1	BM/PNT-2	
VANITY	VF-1	PNT-1	PNT-1	BM/PNT-2	PROVIDE MR GYP.BD.
BATH	VF-1	PNT-1	PNT-1	BM/PNT-2	PROVIDE MR GYP.BD.
LINEN (BATHROOM)	VF-1	PNT-1	PNT-1	BM/PNT-2	
MASTER BATH	VF-1	PNT-1	PNT-1	BM/PNT-2	PROVIDE MR GYP.BD.
STAIRS	CPT-1	PNT-1	PNT-1	BM/PNT-2	BASE ON LANDINGS ONLY
DINING	VF-2	PNT-1	PNT-1	BM/PNT-2	
FAMILY	VF-2	PNT-1	PNT-1	BM/PNT-2	
LOWER LEVEL HALLWAY	VF-2	PNT-1	PNT-1	BM/PNT-2	
KITCHEN	VF-2	PNT-1	PNT-1	BM/PNT-2	
POWDER ROOM	VF-2	PNT-1	PNT-1	BM/PNT-2	PROVIDE MR GYP.BD.
LAUNDRY/MUD	VF-2	PNT-1	PNT-1	BM/PNT-2	
EXTERIOR STORAGE	CF	PNT-3	PNT-3	-	
GARAGE	CF	PNT-3	PNT-3	-	
LIVING	VF-2	PNT-1	PNT-1	BM/PNT-2	
COAT CLOSET	VF-2	PNT-1	PNT-1	BM/PNT-2	
INTERIOR STORAGE	VF-2	PNT-1	PNT-1	BM/PNT-2	
MECHANICAL	CF	PNT-3	PNT-3	-	
ENTRY	VF-2	PNT-1	PNT-1	BM/PNT-2	
BEDROOM CLOSET	CPT-1	PNT-1	PNT-1	BM/PNT-2	

FINISH SCHEDULE NOTES:
1) REFER TO SPECIFICATIONS FOR PRODUCT MANUFACTURERS AND FINISHES NOT LISTED.
2) FOR EACH CLOSET OR ROOM NOT NOTED, MATCH THE FINISHES IN THE SPACE THAT IT OPENS INTO.
3) VF MEANS VINYL FLOOR (TYPE 1= TILE LOOK; TYPE 2 = WOOD FLOOR LOOK)
4) PNT MEANS PAINTING WORK (TYPE 1= EGGSHELL; TYPE 2= WASHABLE SEMI-GLOSS; TYPE 3= ONE COAT PRIMER; TYPE 4= FLAT)
5) BM MEANS BASE MOLDING
6) CF MEANS CONCRETE FLOOR
7) CPT MEANS CARPET

NOTE
INTERIOR FINISHES MAY CONTAIN
UP TO 3 COLOR SELECTIONS

DOOR SCHEDULE (1)							
DOOR NO.	LOCATION	DOOR WIDTH	DOOR HT	DOOR THK	FIRE RATING	REMARKS
1	FRONT ENTRY	3'-0"	6'-8"	1 3/4"	-	4 PANEL, PROVIDE STORM DOOR W/ SAFETY GLAZING
2	STORM DOOR	3'-0"	6'-8"	1 1/4"	-	SAFETY GLASS
3	GARAGE TO HOUSE	3'-0"	6'-8"	1 3/4"	20 MIN	4 PANEL
4	MECHANICAL	3'-0"	6'-8"	1 3/4"	–	FLUSH
5	PATIO DOOR	6'-0"	6'-8"	1 3/4"		PATIO DOORS-WITH FIXED DOOR PANEL AS SHOWN, SAFETY GLAZING
6	PORCH	2'-8"	6'-8"		-	PORCH SCREEN DOOR - THRESHOLD AT SCREENED PORCH SLAB LEVEL
7	INTERIOR DOOR	2'-8"	6'-8"	1 3/8"	-	4 PANEL, SEE PLAN FOR DOOR SWING
8	BATHROOM/ POWDER	2'-6"	6'-8"	1 3/8"	-	4 PANEL, PROVIDE DBL ROBE HOOK @ TUB ROOM
9	CLOSET	2'-4"	6'-8"	1 3/8"	-	4 PANEL
10	CLOSET	2'-0"P	6'-8"	1 3/8"	-	PAIR, 6 PANEL
11	GENERAL	3'-0"	6'-8"	1 3/8"	-	4 PANEL- PROVIDE DBL ROBE HOOK @ ADAPTABLE UNIT TUB ROOM
12	LINEN	1'-6"	6'-8"	1 3/8"	-	2 PANEL
13	GARAGE	3'-0"	6'-8"	1 3/4"	-	FLUSH; SAFETY GLAZING
14	GARAGE	16'-0"	7'-0"		-	GARAGE DOOR WITH ELECTRIC OPENER
15	GARAGE	16'-0"	8'-3"		-	GARAGE DOOR WITH ELECTRIC OPENER
16	PATIO DOOR ADA	3'-0"P	6'-8"	1 3/4"		PATIO DOORS-WITH PUBLIC ACCESS SILL; SAFETY GLAZING

NOTE:
1. UNDERCUT BEDROOM DOORS 1 1/2"; UNDERCUT ALL OTHER INTERIOR DOORS 3/4"
2. FOR ENTRY DOOR COLORS SEE SCHEDULES ON SHEET AS1.01
3. DOORS TO BE LOCATED PER 11/A5.04, CENTERED IN OPENING, OR AS DIMENSIONED ON DRAWINGS

WINDOW SCHEDULE (X)				
WINDOW NO. *	SIZE WD	SIZE HT	TYPE SINGLE HUNG	REMARKS
A	3'-0"	5'-0"	●	PROVIDE VINYL TRIM
B	3'-0"	5'-0"	●	
C	2'-0"	3'-0"	●	

* A MINIMUM OF ONE WINDOW PER BEDROOM SHALL BE AN EMERGENCY EGRESS WINDOW, SEE ELEVATIONS

INTERIOR COLOR PALETTE	
MATERIAL	
WALL PAINT	TBD (SHERWIN WILLIAMS)
CEILING PAINT	TBD (SHERWIN WILLIAMS)
BASE & TRIM PAINT	TBD (SHERWIN WILLIAMS)
VF-1 (TILE LOOK VINYL FLOOR)	CHADDS FORD ARABESQUE BEIGE 62906
VF-2 (WOOD LOOK VINYL FLOOR)	ENGLISH OAK BUTTERSCOTCH 62617
CPT - 1 (28 oz)	F-16 FALCON 28 NATURAL COTTON

COUNTERTOP SCHEDULE		
FINISH		
LOCATION	MATERIAL	
KITCHEN	SS	SANDSTONE
MASTER BATH	SPEC 15400	-
2ND BATHROOM	SPEC 15400	-
LAUNDRY	LAMINATE	SUNSTONE

COUNTERTOP FINISH NOTES:
1) SS MEANS SOLID SURFACE

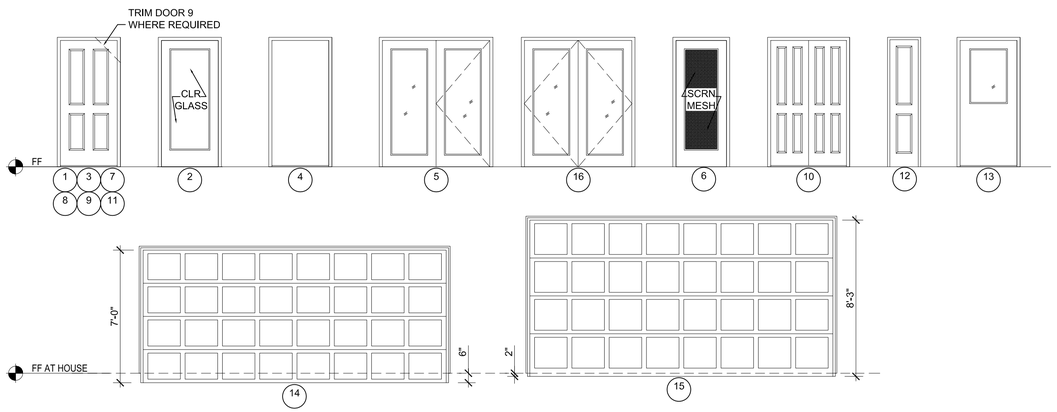

1 DOOR TYPES
1/4" = 1'-0"

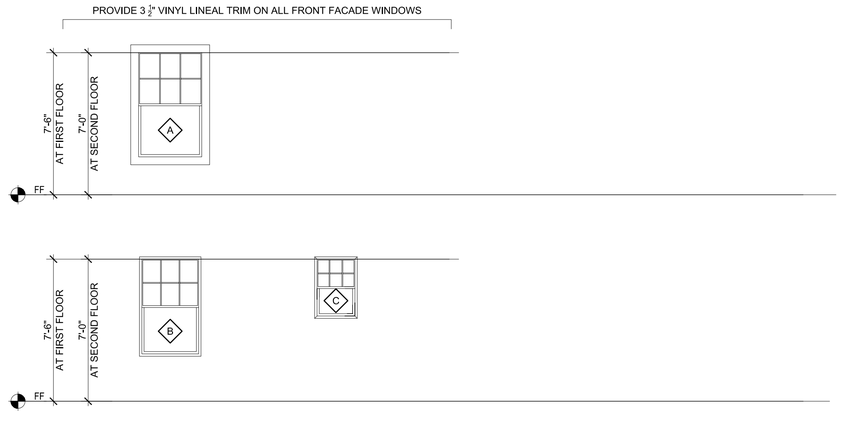

2 WINDOW TYPES
1/4" = 1'-0"

NOTE:
* INDICATES EMERGENCY EGRESS SHOWN ON BUILDING EXTERIOR ELEVATIONS

NCRC 2006 310.1.1 MINIMUM OPENING AREA. ALL EMERGENCY ESCAPE AND RESCUE OPENINGS SHALL HAVE A MINIMUM NET CLEAR OPENABLE AREA OF 4.0 SQUARE FEET. THE MINIMUM NET CLEAR OPENING HEIGHT SHALL BE 22 INCHES. THE MINIMUM NET CLEAR OPENING WIDTH SHALL BE 20 INCHES. EMERGENCY ESCAPE AND RESCUE OPENINGS MUST HAVE A MINIMUM TOTAL GLAZING AREA OF NOT LESS THAN 5 SQUARE FEET IN THE CASE OF A GROUND WINDOW AND NOT LESS THAN 5.7 SQUARE FEET IN THE CASE OF AN UPPER STORY WINDOW.

Atlantic COMMUNITIES
Marine Corps
A Lend Lease Community

INCIDENT & INJURY FREE
SIN LESIÓN O ACCIDENTE
LIVE SAFE WORK SAFE
VIVA SEGURO TRABAJE SEGURO

Actus
Lend Lease

Issue:	Date:

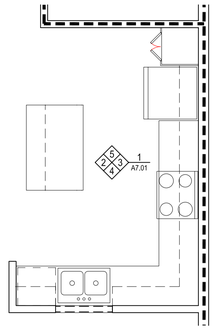

1 BT 401 KITCHEN
1/4" = 1'-0"

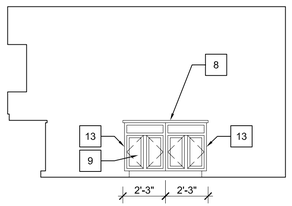

2 BT 401 KITCHEN
1/4" = 1'-0"

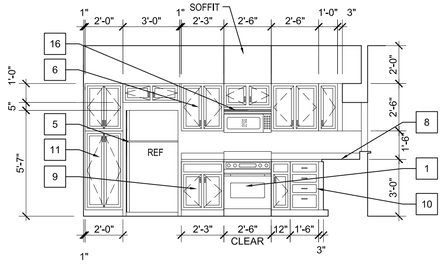

3 BT 401 KITCHEN
1/4" = 1'-0"

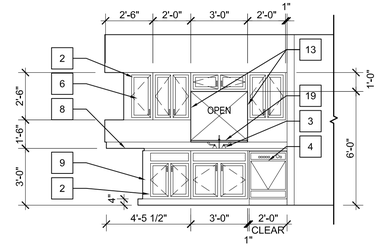

4 BT 401 KITCHEN
1/4" = 1'-0"

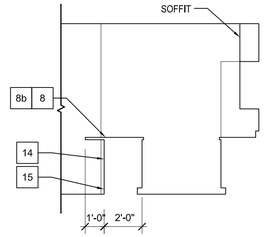

5 BT 401 KITCHEN
1/4" = 1'-0"

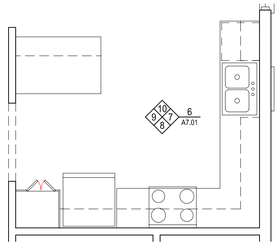

6 BT 402 KITCHEN
1/4" = 1'-0"

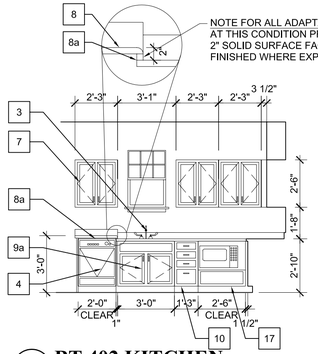

7 BT 402 KITCHEN
1/4" = 1'-0"

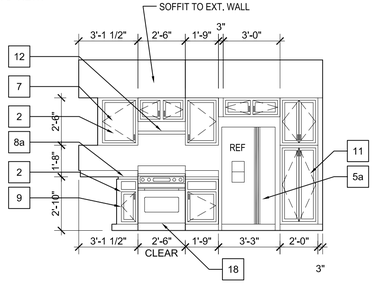

8 BT 402 KITCHEN
1/4" = 1'-0"

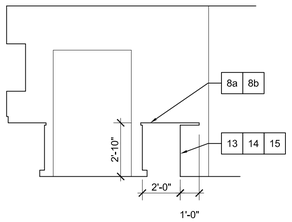

9 BT 402 KITCHEN
1/4" = 1'-0"

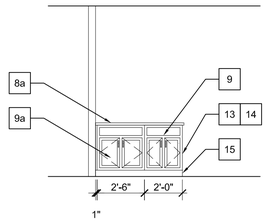

10 BT 402 KITCHEN
1/4" = 1'-0"

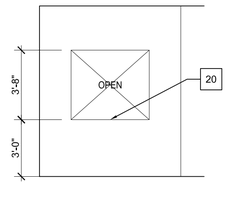

11 BT 402 DINING
1/4" = 1'-0"

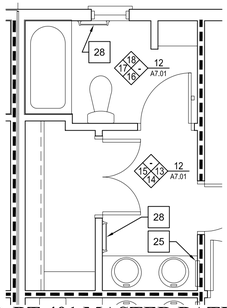

12 BT 401 MASTER BATH
1/4" = 1'-0"

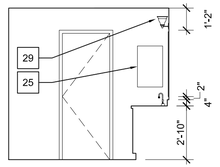

13 BT 401 MASTER BATH
1/4" = 1'-0"

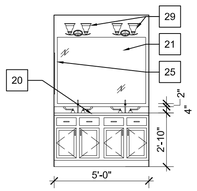

14 BT 401 MASTER BATH
1/4" = 1'-0"

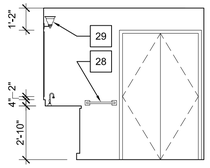

15 BT 401 MASTER BATH
1/4" = 1'-0"

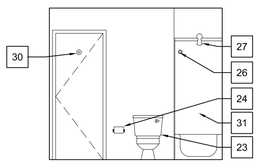

16 BT 401 MASTER BATH
1/4" = 1'-0"

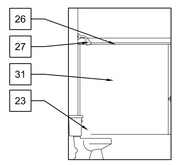

17 BT 401 MASTER BATH
1/4" = 1'-0"

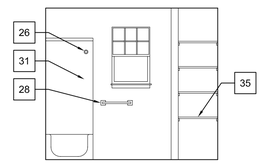

18 BT 401 MASTER BATH
1/4" = 1'-0"

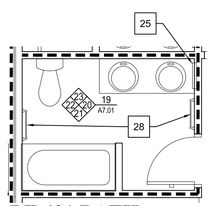

19 BT 401 BATH
1/4" = 1'-0"

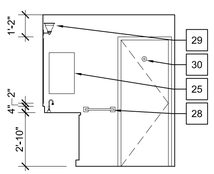

20 BT 401 BATH
1/4" = 1'-0"

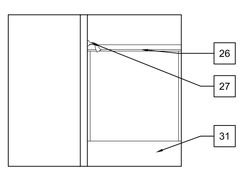

21 BT 401 BATH
1/4" = 1'-0"

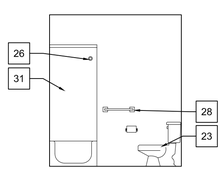

22 BT 401 BATH
1/4" = 1'-0"

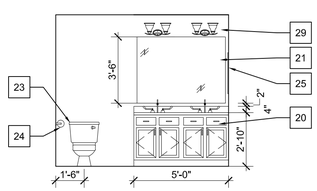

23 BT 401 BATH
1/4" = 1'-0"

INTERIOR ELEVATION KEY NOTES

(ALL KEY NOTES MAY NOT APPLY TO THIS SHEET)

KITCHENS

1 RANGE

2 PROVIDE BLIND CORNER CABINETS AT LOWER AND UPPER CABINETS

3 SINK

4 DISHWASHER

5 REFRIGERATOR / FREEZER COMBINATION

5a REFRIGERATOR / FREEZER COMBINATION - ADAPTABLE

6 WALL MOUNTED CABINET W/ ADJUSTABLE SHELVES

7 ADAPTABLE WALL MOUNTED CABINET W/ ADJUSTABLE SHELVES. MOUNT CABINET AS SHOWN (BOTTOM OF CABINET @ 4'-6") PROVIDE BLOCKING. PROVIDE ADDITIONAL BLOCKING SO THAT UPPER CABINET MAY BE LOWERED TO ACCESSIBLE HEIGHT. (BOTTOM OF CABINET @ 3'-11") PAINT WALLS BEHIND CABINETS.

8 COUNTERTOP - 36" AFF. SEE SPEC FOR ISLAND UNDERLAYMENT REQUIREMENT.

8a ADAPTABLE COUNTERTOP - 34" AFF. SEE SPEC FOR ISLAND UNDERLAYMENT REQUIREMENT

8b PROVIDE COUNTERTOP BRACKET SUPPORTS

9 BASE CABINET W/ FIXED SHELF

9a THIS CABINET IS REMOVABLE TO ENABLE UNIT TO BE ADAPTED TO MEET UFAS REQUIREMENTS. 30" MINIMUM CLEAR WIDTH REQUIRED, COUNTER THICKNESS COMBINED WITH ITS SUPPORTING STRUCTURE SHALL NOT EXCEED 2". NO SHARP OR ABRASIVE SURFACES SHALL BE PERMITTED WITHIN THIS CLEAR AREA, FLOOR FINISH SHALL EXTEND TO WALL, BASEBOARD SHALL BE PROVIDED AT WALL, FLANKING SIDES OF ADJACENT CABINETRY SHALL BE FINISHED. REFER TO UFAS FOR SPECIFIC PLUMBING REQUIREMENTS IN THIS AREA. SUPPORT COUNTER TOP END ON 2" END PANEL

10 BASE DRAWER CABINET

11 6 FULL DEPTH ADJUSTABLE SHELVES @ PANTRY

12 RANGE HOOD SEE 2/A5.07

13 FINISHED END PANEL

14 FINISHED BACK PANEL

15 BASE TRIM ON SIDE AND BACK OF ISLAND, CORNER TRIM ABOVE BASE TRIM, TYP. FOR ALL ISLANDS

16 MICROWAVE OVEN W/ RANGE HOOD SEE 2/A5.07

17 MICROWAVE OVEN

18 COOK TOP RANGE/OVEN-ADAPTABLE

19 WOOD SILL, SEE DETAIL 11/A5.07

20 GYP. BOARD WRAPPED SILL, JAMBS AND HEADER

BATH & VANITIES

19 PEDESTAL SINK

20 VANITY BASE CABINET W/ COUNTER TOP

20a COUNTER TOP

21 LAVATORY MIRROR

22 TOWEL RING @ 48" AFF, PROVIDE BLOCKING AS REQD

22a ADAPTABLE ROBE HOOK @ 48" AFF

23 WATER CLOSET

24 TOILET PAPER HOLDER @ 1'-7" AFF. PROVIDE BLOCKING AS REQUIRED

25 RECESSED MEDICINE CABINET, TOP @ 6'-0" AFF TYP. 40" AFF TO BOTTOM FOR ADAPTABLE UNITS PROVIDE BLOCKING AS REQUIRED

26 SHOWER CURTAIN ROD

27 SHOWER HEAD PIPE @ 6'-6" AFF (OUTLET)

27a SHOWER HEAD PIPE @ 6'-2" AFF (OUTLET)

28 TOWEL BAR. @ 4'-0" MAX. HT. (UON) PROVIDE BLOCKING AS REQUIRED

28a PROVIDE BLOCKING FOR FUTURE GRAB BAR

29 LIGHT FIXTURE

30 DOUBLE ROBE HOOK @ 5' -8"

30a ADAPTABLE BATHTUB/SHOWER UNIT WITH BUILT-IN GRAB BARS

31 BATHTUB/SHOWER UNIT

31a FUTURE HAND HELD SHOWER SPRAY W/ 6' -0" LONG MIN HOSE N.I.C

31b CONTROL PANEL TO BE LOCATED TOWARDS OPEN SIDE OF TUB AREA. CONTROLS TO BE UFAS COMPLIANT

UTILITY ROOMS

32 CLOTHES WASHER- (FURNISHED BY OWNER) SEE MECHANICAL FOR OUTLET BOX

33 CLOTHES DRYER-(FURNISHED BY OWNER) SEE PLAN FOR LOCATION OF WASHER/DRYER

34 UTILITY SINK

34a LAUNDRY UTILITY TABLE, SEE 9/A5.07

SHELVING

35 SHELVING
SEE A-E/A7.02

Atlantic COMMUNITIES
Marine Corps
A Lend Lease Community

INCIDENT & INJURY FREE
SIN LESIÓN O ACCIDENTE

LOVE SAFE WORK SAFE
VIVA SEGURO TRABAJE SEGURO

Actus
Lend Lease

Date:	Issue:
Date:	Issue:
2/08/2011	100% SUBMITTAL

GARRISON GROUP ARCHITECTS, INC.
12 EDUCATION WAY
DOVER, NH 03820
603.516.2323
www.ggarchitc.com

CHRISTINE E CASTALDO
REGISTERED ARCHITECT
11975
NORTH CAROLINA
CHARLOTTE, NC

PHASE 3
50 NEW HOMES AT KNOX LANDING
CAMP LEJEUNE NORTH CAROLINA

INTERIOR ELEVATIONS

Project No:	10-003
Drawn:	CC
Checked:	MA
Approved:	CC
*Scale:	AS NOTED

*use graphic scales if sheet size varies from 22 x 34

SHEET 30 OF 72

A7.01

C:\Projects\Actus\WP50SNCO\WP50SNCO\Sheets\A7.01 INTERIOR ELEVATIONS.dwg Feb 08, 2011 - 11:00am

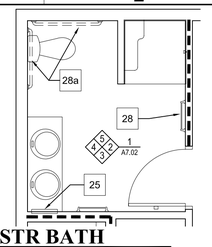

1 BT 402 MSTR BATH
1/4" = 1'-0"

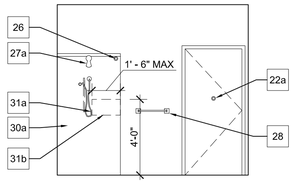

2 BT 402 MSTR BATH
1/4" = 1'-0"

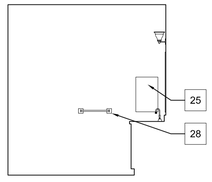

3 BT 402 MSTR BATH
1/4" = 1'-0"

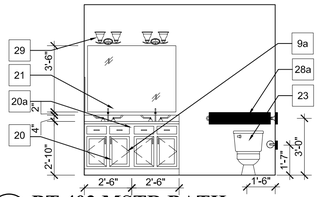

4 BT 402 MSTR BATH
1/4" = 1'-0"

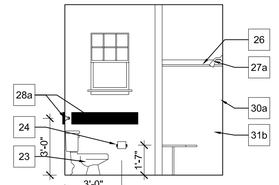

5 BT 402 MSTR BATH
1/4" = 1'-0"

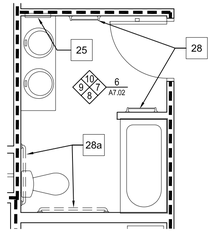

6 BT 402 BATH
1/4" = 1'-0"

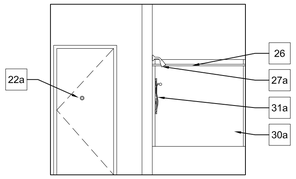

7 BT 402 BATH
1/4" = 1'-0"

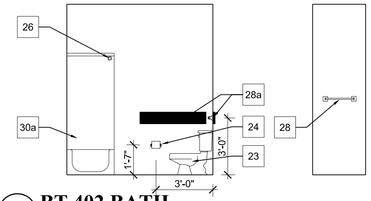

8 BT 402 BATH
1/4" = 1'-0"

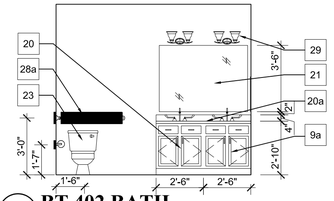

9 BT 402 BATH
1/4" = 1'-0"

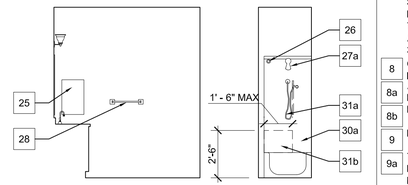

10 BT 402 BATH
1/4" = 1'-0"

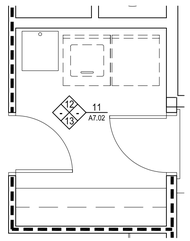

11 BT 401 LAUNDRY/MUD RM
1/4" = 1'-0"

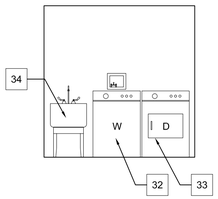

12 BT 401 LAUNDRY/MUD RM
1/4" = 1'-0"

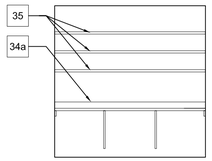

13 BT 401 LAUNDRY/MUD RM
1/4" = 1'-0"

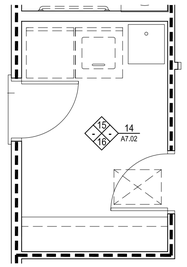

14 BT 402 LAUNDRY/MUD RM
1/4" = 1'-0"

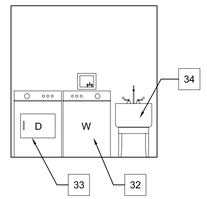

15 BT 402 LAUNDRY/MUD RM
1/4" = 1'-0"

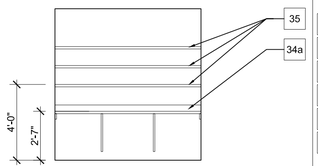

16 BT 402 LAUNDRY/MUD RM
1/4" = 1'-0"

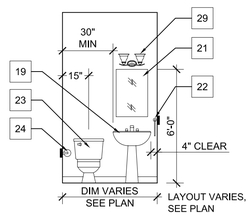

17 TYP. POWDER ROOM
1/4" = 1'-0"

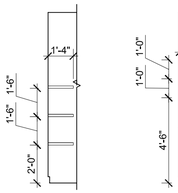

A TYP. INT BULK STORAGE
1/4" = 1'-0"

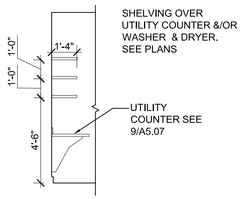

B TYP. SHELVING
1/4" = 1'-0"

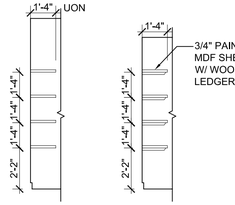

C TYP. BEDROOM CLO
1/4" = 1'-0"

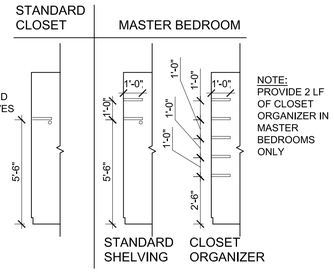

D TYP. COAT CLO
1/4" - 1'-0"

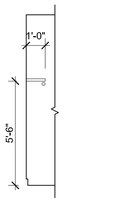

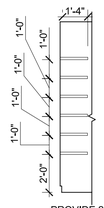

PROVIDE 24 LINEAR FEET OF SHELVING (6
SHELVES @ 4' LONG EACH= 24 lf)

E TYP. EXT BULK STORAGE
1/4" - 1'-0"

INTERIOR ELEVATION KEY NOTES

(ALL KEY NOTES MAY NOT APPLY TO THIS SHEET)

KITCHENS

1 RANGE
2 PROVIDE BLIND CORNER CABINETS AT LOWER AND UPPER CABINETS
3 SINK
4 DISHWASHER
5 REFRIGERATOR / FREEZER COMBINATION
5a REFRIGERATOR / FREEZER COMBINATION - ADAPTABLE
6 WALL MOUNTED CABINET W/ ADJUSTABLE SHELVES
7 ADAPTABLE WALL MOUNTED CABINET W/ ADJUSTABLE SHELVES. MOUNT CABINET AS SHOWN (BOTTOM OF CABINET @ 4'-6") PROVIDE BLOCKING. PROVIDE ADDITIONAL BLOCKING SO THAT UPPER CABINET MAY BE LOWERED TO ACCESSIBLE HEIGHT. (BOTTOM OF CABINET @ 3'-11") PAINT WALLS BEHIND CABINETS.
8 COUNTERTOP - 36" AFF. SEE SPEC FOR ISLAND UNDERLAYMENT REQUIREMENT.
8a ADAPTABLE COUNTERTOP - 34" AFF. SEE SPEC FOR ISLAND UNDERLAYMENT REQUIREMENT
8b PROVIDE COUNTERTOP BRACKET SUPPORTS
9 BASE CABINET W/ FIXED SHELF
9a THIS CABINET IS REMOVABLE TO ENABLE UNIT TO BE ADAPTED TO MEET UFAS REQUIREMENTS. 30" MINIMUM CLEAR WIDTH REQUIRED, COUNTER THICKNESS COMBINED WITH ITS SUPPORTING STRUCTURE SHALL NOT EXCEED 2". NO SHARP OR ABRASIVE SURFACES SHALL BE PERMITTED WITHIN THIS CLEAR AREA, FLOOR FINISH SHALL EXTEND TO WALL, BASEBOARD SHALL BE PROVIDED AT WALL, FLANKING SIDES OF ADJACENT CABINETRY SHALL BE FINISHED. REFER TO UFAS FOR SPECIFIC PLUMBING REQUIREMENTS IN THIS AREA. SUPPORT COUNTER TOP END ON 2" END PANEL
10 BASE DRAWER CABINET
11 6 FULL DEPTH ADJUSTABLE SHELVES @ PANTRY
12 RANGE HOOD SEE 2/A5.07
13 FINISHED END PANEL
14 FINISHED BACK PANEL
15 BASE TRIM ON SIDE AND BACK OF ISLAND, CORNER TRIM ABOVE BASE TRIM, TYP. FOR ALL ISLANDS
16 MICROWAVE OVEN W/ RANGE HOOD SEE 2/A5.07
17 MICROWAVE OVEN
18 COOK TOP RANGE/OVEN-ADAPTABLE
19 WOOD SILL, SEE DETAIL 11/A5.07
20 GYP. BOARD WRAPPED SILL, JAMBS AND HEADER

BATH & VANITIES

19 PEDESTAL SINK
20 VANITY BASE CABINET W/ COUNTER TOP
20a COUNTER TOP
21 LAVATORY MIRROR
22 TOWEL RING @ 48" AFF, PROVIDE BLOCKING AS REQD
22a ADAPTABLE ROBE HOOK @ 48" AFF
23 WATER CLOSET
24 TOILET PAPER HOLDER @ 1'-7" AFF. PROVIDE BLOCKING AS REQUIRED
25 RECESSED MEDICINE CABINET, TOP @ 6'-0" AFF TYP, 40" AFF TO BOTTOM FOR ADAPTABLE UNITS PROVIDE BLOCKING AS REQUIRED
26 SHOWER CURTAIN ROD
27 SHOWER HEAD PIPE @ 6'-6" AFF (OUTLET)
27a SHOWER HEAD PIPE @ 6'-2" AFF (OUTLET)
28 TOWEL BAR. @ 4'-0" MAX. HT. (UON) PROVIDE BLOCKING AS REQUIRED
28a PROVIDE BLOCKING FOR FUTURE GRAB BAR
29 LIGHT FIXTURE
30 DOUBLE ROBE HOOK @ 5' -8"
30a ADAPTABLE BATHTUB/SHOWER UNIT WITH BUILT-IN GRAB BARS
31 BATHTUB/SHOWER UNIT
31a FUTURE HAND HELD SHOWER SPRAY W/ 6' -0" LONG MIN HOSE N.I.C
31b CONTROL PANEL TO BE LOCATED TOWARDS OPEN SIDE OF TUB AREA. CONTROLS TO BE UFAS COMPLIANT

UTILITY ROOMS

32 CLOTHES WASHER- (FURNISHED BY OWNER) SEE MECHANICAL FOR OUTLET BOX
33 CLOTHES DRYER-(FURNISHED BY OWNER) SEE PLAN FOR LOCATION OF WASHER/DRYER
34 UTILITY SINK
34a LAUNDRY UTILITY TABLE, SEE 9/A5.07

SHELVING

35 SHELVING SEE A-E/A7.02

Atlantic COMMUNITIES Marine Corps — A Land Lease Community

INCIDENT & INJURY FREE
SIN LESIÓN O ACCIDENTE

LOVE SAFE WORK SAFE — VIVA SEGURO TRABAJE SEGURO

Actus Lend Lease

Date:	Issue:
2/08/2011	100% SUBMITTAL

GARRISON GROUP ARCHITECTS, INC.
12 EDUCATION WAY
DOVER, NH 03820
(603) 953-2821
www.ggarchc.com

CHRISTINE E CASTALDO — REGISTERED ARCHITECT — 11975 — NORTH CAROLINA — CHARLOTTE, NC

PHASE 3
50 NEW HOMES AT KNOX LANDING
CAMP LEJEUNE NORTH CAROLINA

INTERIOR ELEVATIONS

Project No:	10-003
Drawn:	CC
Checked:	MA
Approved:	CC
*Scale:	AS NOTED

*use graphic scales if sheet size varies from 22 x 34

SHEET 31 OF 72

A7.02

C:\Projects\Actus\KP50SNCO\KP50SNCO\Sheets\A7.02 INTERIOR ELEVATIONS.dwg Feb 08, 2011 - 11:02am

GENERAL NOTES

1. ALL PHASES OF THE WORK SHALL CONFORM TO THE REQUIREMENTS OF THE NORTH CAROLINA RESIDENTIAL CODE, 2006 EDITION.
2. DETAILS TAKE PRECEDENCE OVER GENERAL NOTES. DIMENSIONS TAKE PRECEDENCE OVER SCALE SHOWN ON DRAWINGS.
3. ALL DETAILS ARE TYPICAL. AND APPLY WHEREVER SIMILAR CONDITIONS EXIST UNLESS SPECIFICALLY SHOWN OR NOTED OTHERWISE.
4. CONNECTIONS SHALL CONFORM TO TABLE R602.3(1) OF THE INTERNATIONAL RESIDENTIAL CODE, UNLESS OTHERWISE NOTED.
5. ALL NAILS SHALL BE SMOOTH COMMON, BOX OR DEFORMED SHANK U.N.O. OTHER NAILS MAY BE USED PROVIDED THEY CONFORM TO NER-272 AND HAVE EQUAL OR GREATER CAPACITY THAN THE NAILS INDICATED. ALL NAILS USED IN PRESSURE TREATED WOOD SHALL BE STAINLESS STEEL OR DOUBLE HOT-DIP GALVANIZED.
6. METAL CONNECTORS SHALL BE AS MANUFACTURED BY SIMPSON STRONG-TIE COMPANY, INC., PLEASANTON, CAps. PROVIDE REQUIRED BOLTS OR NAILS TO INSTALL CONNECTORS AS RECOMMENDED BY THE MANUFACTURER.
7. PROVIDE FRAMING, CONNECTIONS, BLOCKING, BACKING, ETC. NOT OTHERWISE SHOWN, AS REQUIRED TO COMPLETE THE CONSTRUCTION IN ACCORDANCE WITH THE CODE AND SOUND INDUSTRY PRACTICE.
8. ALL METAL CONNECTORS USED IN PRESSURE TREATED WOOD SHALL BE STAINLESS STEEL, HOT-DIP GALVANIZED, OR ZMAX GALVANIZED.

FOUNDATION NOTES

1. FOUNDATIONS ARE DESIGNED TO CONFORM TO THE RECOMMENDATIONS OF " GEOTECHNICAL ENGINEERING REPORT. PROPOSED FAMILY HOUSING-SCALES CREEK AREA" PREPARED BY TERRACON, RALEIGH, NORTH CAROLINA TERRACON JOB NO. 70055012 DATED JULY 19, 2005
2. CONCRETE SHALL HAVE A MINIMUM COMPRESSIVE STRENGTH OF 3000 PSI AT 28 DAYS UNLESS OTHERWISE NOTED.
3. MINIMUM CONCRETE COVER FOR REINFORCING SHALL BE 3" FOR CONCRETE PLACED AGAINST EARTH AND 2" FOR ALL OTHER CONCRETE UNLESS OTHERWISE NOTED.
4. REINFORCING SHALL CONFORM TO ASTM A615, GRADE 40 FOR #3 BARS, GRADE 60 FOR #4 BARS AND LARGER.
5. MECHANICAL ANCHORS SHALL BE TITEN HD ANCHORS.
6. BUILDING SLABS SHALL BE 4" CONCRETE WITH 6X6-W1.4xW1.4 WWF AT MID DEPTH OF SLAB. BELOW ALL BUILDING SLABS PROVIDE 10 MIL VAPOR BARRIER OVER 4" CAPILLARY BARRIER OVER PREPARED SUBGRADE
7. GARAGE SLABS SHALL BE 4" CONCRETE WITH 6X6-W1.4XW1.4 WWF AT MID DEPTH OF SLAB. BELOW GARAGE SLABS, PROVIDE 10 MIL VAPOR BARRIER OVER 4" CAPILLARY BARRIER OVER PREPARED SUBGRADE.
8. PATIOS, STOOPS AND WALKWAYS SHALL BE 4" CONCRETE WITH 6X6-W1.4xW1.4 WWF AT MID DEPTH OF SLAB OVER PREPARED SUBGRADE.
9. PROVIDE SAWCUT, TOOLED, OR PREFABRICATED CONTROL JOINTS IN BUILDING SLABS AT 18'-0" MAXIMUM O.C. IN EACH DIRECTION. NO MORE THAN 325 SQUARE FEET OF BUILDING SLAB SHALL BE PROVIDED BETWEEN CONTROL JOINTS. PROVIDE CONTROL JOINTS IN GARAGE SLABS AT 12'-0" MAXIMUM O.C. IN EACH DIRECTION. NO MORE THAN 144 SQUARE FEET OF GARAGE SLAB SHALL BE PROVIDED BETWEEN CONTROL JOINTS. PROVIDE CONTROL JOINTS IN PATIO SLABS AT 8'-0" MAXIMUM O.C. IN EACH DIRECTION. NO MORE THAN 64 SQUARE FEET OF PATIO SLAB SHALL BE PROVIDED BETWEEN CONTROL JOINTS. PROVIDE CONTROL JOINTS IN WALKWAYS AT APPROXIMATELY 4'-0" O.C.
10. THICKEN INTERIOR FOOTINGS AS REQUIRED TO ACCOMMODATE HOLDOWN ANCHORS PER DETAIL 7/S5.02.

LEGEND

Symbol	Description
SIZE PER PLAN → 2-2x10 (dashed line)	DROPPED BEAM (TOP OF BEAM @ TOP OF PLATE)
SIZE PER PLAN → 2-2x8 (solid line)	FLUSH BEAM (OR GIRDER FLOOR TRUSS) (BEARS ON TOP PLATES)
SIZE PER PLAN → 2-2x6 (dash-dot line)	HEADER (SEE ARCHITECTURAL ELEVATIONS FOR HEIGHT ABOVE FLOOR OR SLAB)
EXTENT, SPAN, TRUSS @ 24" O.C.	TYPICAL TRUSS
EXTENT, g g, D, HOLDOWN EA SIDE	SHEAR WALL (ON FRAMING PLANS- INDICATES SHEAR PANEL, NAILING & HOLDOWNS)
g g, D	SHEAR WALL (ON FOUNDATION PLANS- INDICATES SILL ANCHORS AND EMBEDED HOLDOWNS)
⊠	POST OR DOUBLE STUD. SEE WALL FRAMING NOTE 9 FOR SIZE.
= = = = =	WALL BELOW
= = = = =	BEARING WALL BELOW
═══════	WALL ABOVE

DESIGN CRITERIA

ROOF LIVE LOAD..20 PSF

WIND LOAD CRITERIA..130 MPH, EXPOSURE C

SEISMIC LOAD CRITERIA...CATEGORY B

ALLOWABLE SOIL BEARING.....................................2000 PSF

WALL FRAMING NOTES

1. LUMBER FOR STUDS SHALL BE SOUTHERN PINE, DOUGLAS FIR-LARCH, HEM FIR OR SPRUCE-PINE-FIR, STUD GRADE UNLESS OTHERWISE NOTED.
2. LUMBER FOR PLATES, SILLS & BLOCKING SHALL BE SOUTHERN PINE, DOUGLAS FIR, HEM FIR OR SPRUCE-PINE-FIR, STANDARD AND BETTER. SILL PLATES ON CONCRETE SHALL BE PRESSURE TREATED.
3. LUMBER FOR HEADERS AND POSTS SHALL BE SOUTHERN PINE OR DOUGLAS FIR, #2 AND BETTER. PORCH POSTS SHALL BE LSL ENGINEERED WOOD POSTS.
4. TYPICAL STUD WALLS (U.N.O.)
   - A. EXTERIOR STUD WALLS SHALL BE 2x6 STUDS @ 24" O.C. WITH 2X SILL PLATE AND DOUBLE 2x TOP PLATE.
   - B. EXTERIOR GARAGE STUD WALLS, NO GREATER THAN 10' IN HEIGHT, SHALL BE 2x6 STUDS @ 24" O.C. WITH 2X SILL PLATE AND DOUBLE 2x TOP PLATE.
   - C. INTERIOR BEARING STUD WALLS SHALL BE 2x4 STUDS @ 16" O.C. WITH 2X SILL PLATE AND DOUBLE 2x TOP PLATE.
   - D. INTERIOR NON-BEARING STUD WALLS SHALL BE 2x4 STUDS @ 24" O.C. WITH 2x SILL PLATE AND DOUBLE 2x TOP PLATE. (OR 1-2x & 1-1x TOP PLATE @ ROOF TRUSSES)
   - E. FIRST STORY STUD WALLS SHALL HAVE A 9'-1" TOP PLATE U.N.O. SECOND STORY STUD WALL SHALLS HAVE A 8'-1" TOP PLATE U.N.O.
   - F. STUD WALLS WITH AN UNBRACED HEIGHT GREATER THAN 10' SHALL BE 2x6 STUDS @ 16" O.C.
   - G. PROVIDE TEMPORARY BRACING TO ADEQUATELY BRACE THE WALLS DURING CONSTRUCTION.
5. AS AN OPTION, PREFABRICATED WALL PANELS MAY BE USED IN LIEU OF SITE BUILT STUD WALLS.
6. TYPICAL SILL ANCHORS (U.N.O.)
   - A. EXTERIOR WALLS: MASA @ 5'-0" O.C. WITH 1-MASA AT 12 INCHES MAX FROM EACH END OF EACH PIECE. 1/2"Ø TITEND HD ANCHORS, EMBEDDED 4", MAY BE USED IN LIEU OF MASA ANCHORS.
   - B. INTERIOR BEARING WALLS: SHOT PINS @ 16" O.C. WITH 1-PIN AT 6" FROM EACH END OF EACH PIECE.
   - C. INTERIOR NON-BEARING PARTITIONS: SHOTPINS @ 32" O.C. WITH 1-PIN AT 6" FROM EACH END OF EACH PIECE.
   - D. ALL SILL PLATES SHALL HAVE A MINIMUM OF 2 ANCHORS
7. SHOT PINS SHALL BE PDP POWDER ACTUATED FASTENERS, WITH 1 1/4 INCH MINIMUM EMBEDMENT.
8. PROVIDE 1x TOP PLATE AT INTERIOR PARTITIONS SO THAT ROOF TRUSSES DO NOT BEAR ON INTERIOR PARTITIONS.
9. PROVIDE DOUBLE 2x STUDS AT BEARING POINTS OF ALL DOUBLE 2x OR 4x BEAMS U.N.O. ON PLAN. AT BEARING POINTS OF ALL GIRDER TRUSES AND HIP MASTERS PROVIDE MULTIPLE 2x STUDS TO MATCH THE NUMBER OF PLYS U.N.O. ON PLAN. PROVIDE 4x4 POST AT BEARING POINTS OF ALL 3 1/2" ENGINEERED BEAMS U.N.O ON PLAN. PROVIDE 4x6 POST AT BEARING POINTS OF ALL 5 1/2" ENGINEERED BEAMS U.N.O. ON PLAN.
10. WHERE POSTS OR DOUBLE STUDS OCCUR IN SECOND STORY WALLS, PROVIDE LIKE MEMBERS IN FIRST STORY WALLS DIRECTLY BELOW AND SOLID BLOCKING IN THE FLOOR SPACE.
11. ALL EXTERIOR WALLS SHALL BE SHEATHED WITH 15/32" APA RATED SHEATHING WITH 8d @ 6" O.C. EDGE NAILING AND 8d @ 12" O.C. FIELD NAILING U.N.O.
12. SEE ARCHITECTURAL DRAWINGS FOR GRAB BAR REINFORCEMENT

FLOOR FRAMING NOTES

1. LUMBER FOR FLOOR BEAMS SHALL BE SOUTHERN PINE OR DOUGLAS FIR, #2 AND BETTER UNLESS OTHERWISE NOTED.
2. ENGINEERED WOOD BEAMS SHALL BE "TIMBERSTRAND" (LSL) OR "MICROLLAM" (LVL) AS NOTED ON THE PLANS AND AS MANUFACTURED BY TRUS JOIST/MacMILLAN, OR EQUAL
3. MULTIPLE MEMBER CONNECTIONS FOR ENGINEERED WOOD BEAMS SHALL BE PER THE REQUIREMENTS OF THE MANUFACTURER.
4. AS AN OPTION, GIRDER FLOOR TRUSSES DESIGNED BY TRUSS FABRICATOR MAY BE USED IN LIEU OF FLUSH FLOOR BEAMS.
5. FLOOR TRUSSES SHOWN ARE FOR ILLUSTRATION ONLY. THE FINAL DESIGN, LAYOUT, AND CONFIGURATION SHALL BE BY THE TRUSS FABRICATOR. COORDINATE LAYOUT TO ACCOMODATE DUCT CHASES.
6. COORDINATE TRUSS DESIGN AND LAYOUT WITH THE MECHANICAL SYSTEM REQUIREMENTS. SEE MECHANICAL DRAWINGS.
7. THE TRUSS FABRICATOR SHALL SPECIFY ALL CONNECTORS REQUIRED TO COMPLETE THE INSTALLATION IN ACCORDANCE WITH THE DESIGN. THE TRUSS INSTALLER SHALL PROVIDE ALL REQUIRED CONNECTORS.
8. THE TRUSS FABRICATOR SHALL SPECIFY ALL PERMANENT BRACING REQUIRED AND NOT OTHERWISE PROVIDED BY THE SHEATHING OR BLOCKING TO ASSURE STABILITY AND CONFORMANCE WITH THE DESIGN. THE TRUSS INSTALLER SHALL PROVIDE ALL PERMANENT BRACING SPECIFIED BY THE FABRICATOR.
8.
9. PROVIDE TEMPORARY BRACING FOR THE TRUSSES AS REQUIRED TO ASSURE STABILITY DURING CONSTRUCTION.
10. FLOOR TRUSSES SHALL SUPPORT A SUPERIMPOSED DEAD LOAD OF 10 PSF AT THE TOP CHORD AND 4 PSF AT THE BOTTOM CHORD IN ADDITION TO THEIR OWN WEIGHT. FLOOR TRUSSES SHALL SUPPORT A LIVE LOAD OF 40 PSF AT THE TOP CHORD.
11. FLOOR SHEATHING SHALL BE 23/32", TONGUE-AND-GROOVE, APA RATED STURD-I-FLOOR WITH A SPAN INDEX OF 24 O.C. GLUE & NAIL WITH 10d @ 6" O.C. EDGE NAILING AND 10d @ 10 " O.C. FIELD NAILING. PANELS SHALL BE PLACED PERPENDICULAR TO FRAMING. MINIMUM PANEL DIMENSION SHALL BE 2'-0". GLUE SHEATHING TO FLOOR JOISTS AT ALL EDGES AND INTERMEDIATE SUPPORTS.
12. TRUSSES NOTED AS "DRAG TRUSS" ON THE PLANS SHALL BE DESIGNED TO TRANSFER 200 PLF OF LATERAL LOAD, APPLIED ALONG THE ENTIRE LENGTH OF THE TOP CHORD, TO THE TRUSS SUPPORTS.

ROOF FRAMING NOTES

1. ROOF TRUSSES SHOWN ARE FOR ILLUSTRATION ONLY. THE FINAL DESIGN, LAYOUT, AND CONFIGURATION SHALL BE BY THE TRUSS FABRICATOR. COORDINATE LAYOUT TO ACCOMODATE DUCT CHASES.
2. ROOF TRUSSES SHALL SUPPORT A SUPERIMPOSED DEAD LOAD OF 10 PSF AT THE TOP CHORD AND 4 PSF AT THE BOTTOM CHORD IN ADDITION TO THEIR OWN WEIGHT. ROOF TRUSSES SHALL SUPPORT A LIVE LOAD OF 20 PSF AT THE TOP CHORD. ROOF TRUSSES SHALL SUPPORT A 10 PSF BOTTOM CHORD LIVE LOAD NONCONCURRENT WITH ANY OTHER LIVE LOADS.
3. THE TRUSS FABRICATOR SHALL SPECIFY ALL CONNECTORS REQUIRED TO COMPLETE THE INSTALLATION IN ACCORDANCE WITH THE DESIGN. THE TRUSS INSTALLER SHALL PROVIDE ALL REQUIRED CONNECTORS.
4. THE TRUSS FABRICATOR SHALL SPECIFY ALL PERMANENT BRACING REQUIRED AND NOT OTHERWISE PROVIDED BY THE SHEATHING OR BLOCKING TO ASSURE STABILITY AND CONFORMANCE WITH THE DESIGN. THE TRUSS INSTALLER SHALL PROVIDE ALL PERMANENT BRACING SPECIFIED BY THE FABRICATOR.
5. PROVIDE TEMPORARY BRACING FOR THE ROOF TRUSSES AS REQUIRED TO ASSURE STABILITY DURING CONSTRUCTION.
6. ROOF TRUSSES INCLUDING GABLE ENDS SHALL BE DESIGNED FOR LATERAL AND UPLIFT WIND LOAD AS REQUIRED BY ASCE 7- 02, FOR A 130 MPH WIND SPEED, EXPOSURE C.
7. GABLE END TRUSSES SHALL BE DESIGNED OR BRACED AS REQUIRED TO RESIST OUT OF PLANE WIND LOADS. THE ROOF TRUSS INSTALLER SHALL PROVIDE ALL PERMANENT BRACING REQUIRED BY THE ROOF TRUSS DESIGNER.

   ROOF SHEATHING SHALL BE 19/32" APA RATED SHEATHING WITH A SPAN INDEX OF 32/16. NAILING SHALL BE 8d @ 6" O.C. EDGE NAILING AND 8d @ 12" O.C. FIELD NAILING. ROOF SHEATHING SHALL BE PLACED PERPENDICULAR TO FRAMING. PROVIDE PANEL CLIPS AT MID SPAN OF UNSUPPORTED EDGES.
9. TRUSSES NOTED AS "DRAG TRUSS" ON THE PLANS SHALL BE DESIGNED TO TRANSFER 200 PLF OF LATERAL LOAD, APPLIED ALONG THE ENTIRE LENGTH OF THE TOP CHORD, TO THE TRUSS SUPPORTS.

Atlantic COMMUNITIES Marine Corps A Lend Lease Community

INCIDENT & INJURY FREE
SIN LESIÓN O ACCIDENTE
LIVE SAFE WORK SAFE / VIVA SEGURO TRABAJE SEGURO

Actus Lend Lease

Issue: | Date: | Issue: | Date:

100% SUBMITTAL
02-08-2011

Court Street Engineering
1008 Harrison St.
Lynchburg, Virginia 24504
(434) 846-3669 fax (434) 846-4230

NORTH CAROLINA PROFESSIONAL ENGINEER SEAL 037593 SAMUEL K. ROSKELLEY

PHASE 3
50 NEW HOMES AT KNOX LANDING
CAMP LEJEUNE NORTH CAROLINA

GENERAL NOTES

Project No:	10-003
Drawn:	RHA
Checked:	RHA
Approved:	SKR
*Scale:	NONE

*use graphic scales if sheet size varies from 22 x 34

NOTES:
(1) VERIFY GARAGE DOOR OPENING DIMENSION WITH GARAGE DOOR MANUFACTURER
(2) INTERIOR FOOTINGS UNDER SHEAR WALLS ARE DEEPER THAN STANDARD. SEE DETAILS FOR CORRECT DEPTHS.

1 FOUNDATION PLAN- BUILDING TYPE 401a

1/4"=1'-0"

0 2' 4' 8'

S:\Lejeune redebt\Knox Cove I\Structural\S1-01.dwg Feb 08, 2011 - 10:39am

Atlantic COMMUNITIES Marine Corps — A Lend Lease Community

INCIDENT & INJURY FREE
SIN LESIÓN O ACCIDENTE

LOVE SAFE WORK SAFE — VIVA SEGURO TRABAJE SEGURO

Actus Lend Lease

Date:	Issue:
Date:	Issue:

100% SUBMITTAL
02-08-2011

Court Street Engineering
1008 Harrison St.
Lynchburg, Virginia 24504
(434) 846-3669 fax (434) 846-4230

NORTH CAROLINA PROFESSIONAL SEAL 037593 ENGINEER SAMUEL K. ROSKELLEY

PHASE 3
50 NEW HOMES AT KNOX LANDING
CAMP LEJEUNE NORTH CAROLINA

FOUNDATION PLAN
BUILDING TYPE 401a

Project No:	10-003
Drawn:	RHA
Checked:	RHA
Approved:	SKR
*Scale:	1/4"=1'-0"

*use graphic scales if sheet size varies from 22 x 34

SHEET 33 OF 72

S1.01

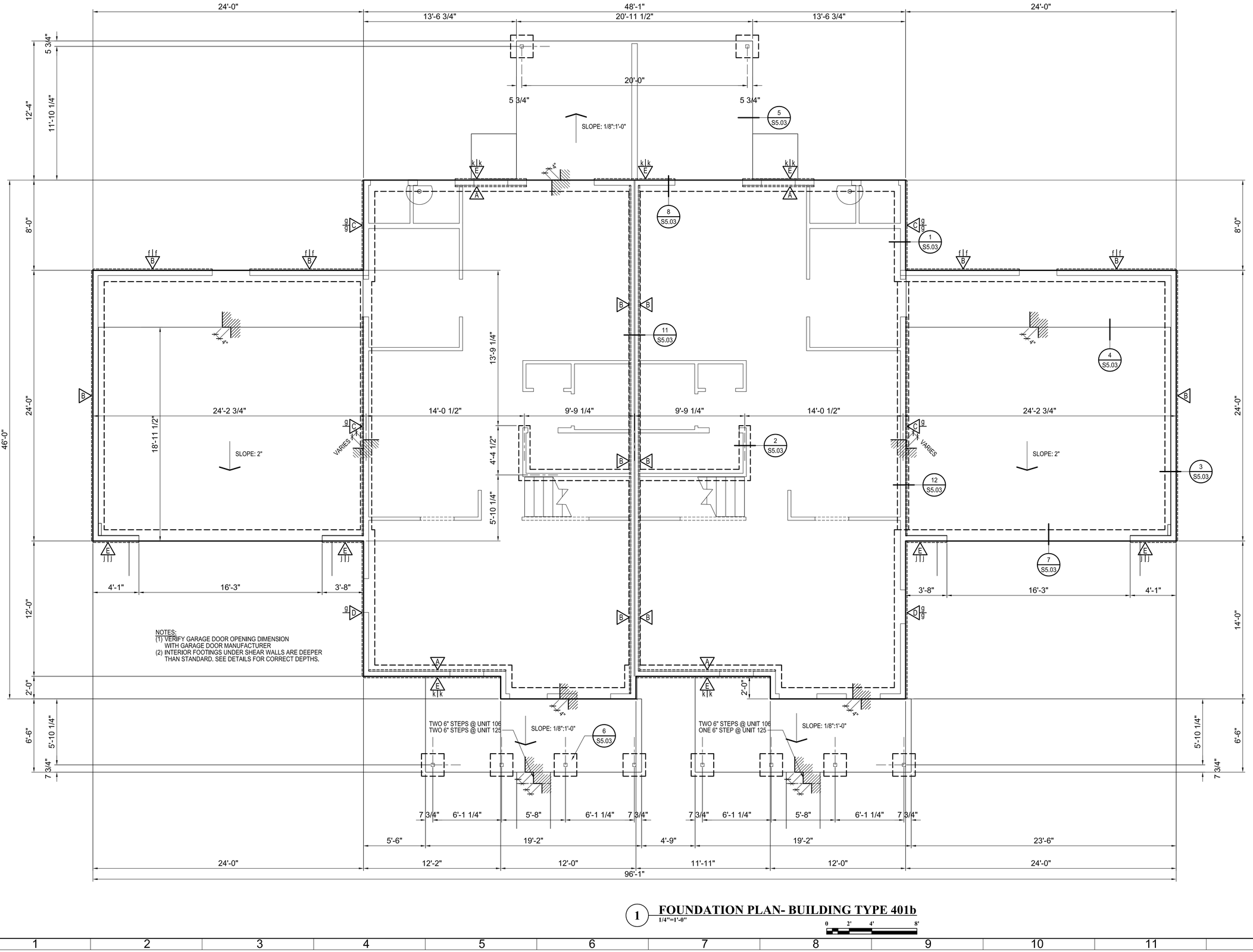

1 FOUNDATION PLAN- BUILDING TYPE 401b

1/4"=1'-0"

0 2' 4' 8'

Atlantic COMMUNITIES Marine Corps — A Lend Lease Community

INCIDENT & INJURY FREE
SIN LESIÓN O ACCIDENTE

LOVE SAFE WORK SAFE — VIVA SEGURO TRABAJE SEGURO

Actus Lend Lease

Date:	Issue:	Date:	Issue:

100% SUBMITTAL
02-08-2011

Court Street Engineering
1008 Harrison St.
Lynchburg, Virginia 24504
(434) 846-3669 fax (434) 846-4230

PROFESSIONAL SEAL 037593 ENGINEER SAM

PHASE 3
50 NEW HOMES AT KNOX LANDING
CAMP LEJEUNE NORTH CAROLINA

FOUNDATION PLAN BUILDING TYPE 401b

Project No:	10-003
Drawn:	RHA
Checked:	RHA
Approved:	SKR
*Scale:	1/4"=1'-0"

*use graphic scales if sheet size varies from 22 x 34

SHEET 34 OF 72

S1.02

S:\Lejeune redebt\Knox Cove I\Structural\S1-02.dwg Feb 08, 2011 - 10:39am

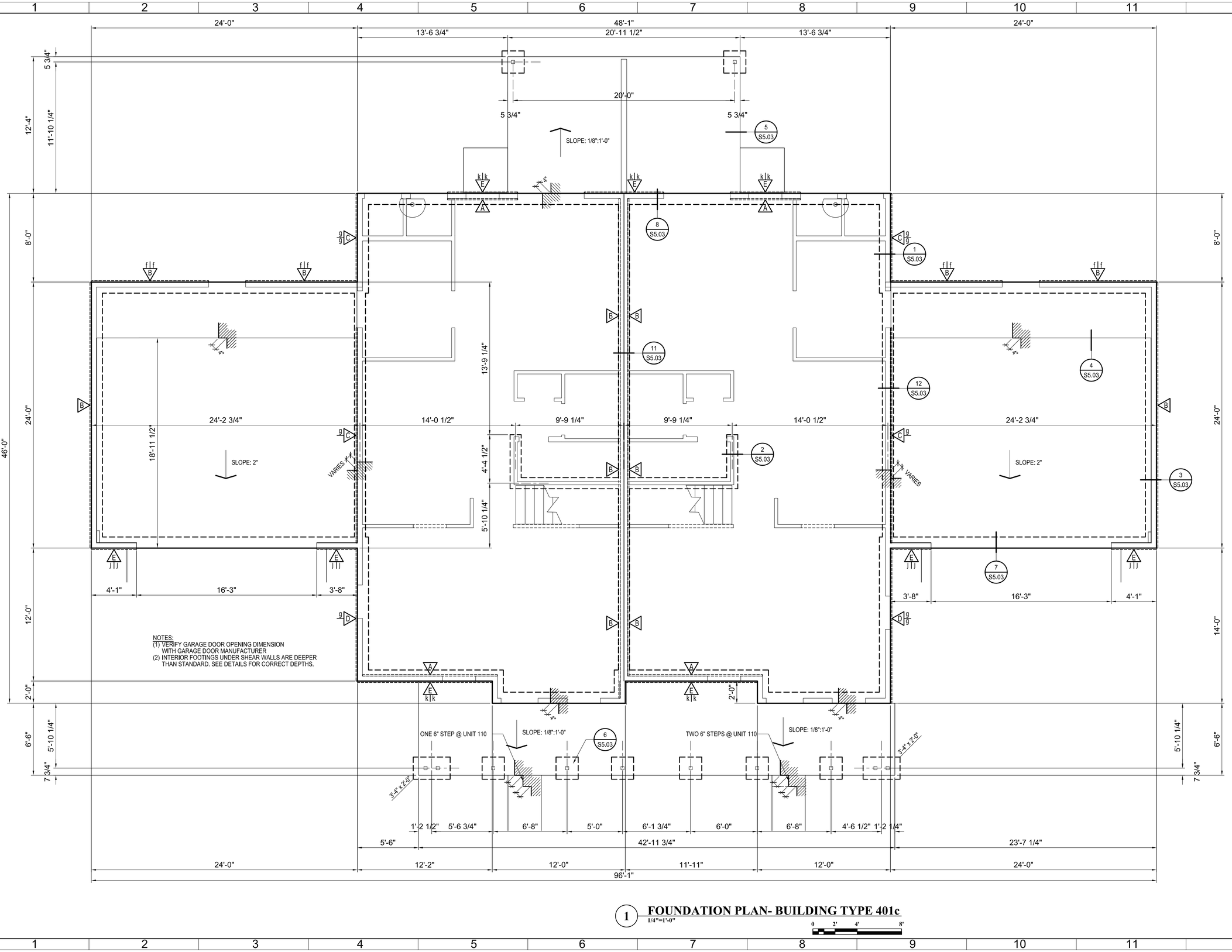

1 FOUNDATION PLAN- BUILDING TYPE 401c

1/4"=1'-0"

0 2' 4' 8'

Atlantic COMMUNITIES Marine Corps — A Lend Lease Community

INCIDENT & INJURY FREE
SIN LESIÓN O ACCIDENTE

LOVE SAFE WORK SAFE / VIVA SEGURO TRABAJE SEGURO

Actus Lend Lease

Date:	Issue:
Date:	Issue:

100% SUBMITTAL
02-08-2011

Court Street Engineering
1008 Harrison St.
Lynchburg, Virginia 24504
(434) 846-3669 fax (434) 846-4230

NORTH CAROLINA PROFESSIONAL SEAL 037583 ENGINEER SAMUEL K. ROSKELLEY

PHASE 3
50 NEW HOMES AT KNOX LANDING
CAMP LEJEUNE NORTH CAROLINA

FOUNDATION PLAN
BUILDING TYPE 401c

Project No:	10-003
Drawn:	RHA
Checked:	RHA
Approved:	SKR
*Scale:	1/4"=1'-0"

*use graphic scales if sheet size varies from 22 x 34

SHEET 35 OF 72

S1.03

S:\Lejeune redebt\Knox Cove I\Structural\S1-03.dwg Feb 08, 2011 - 10:38am

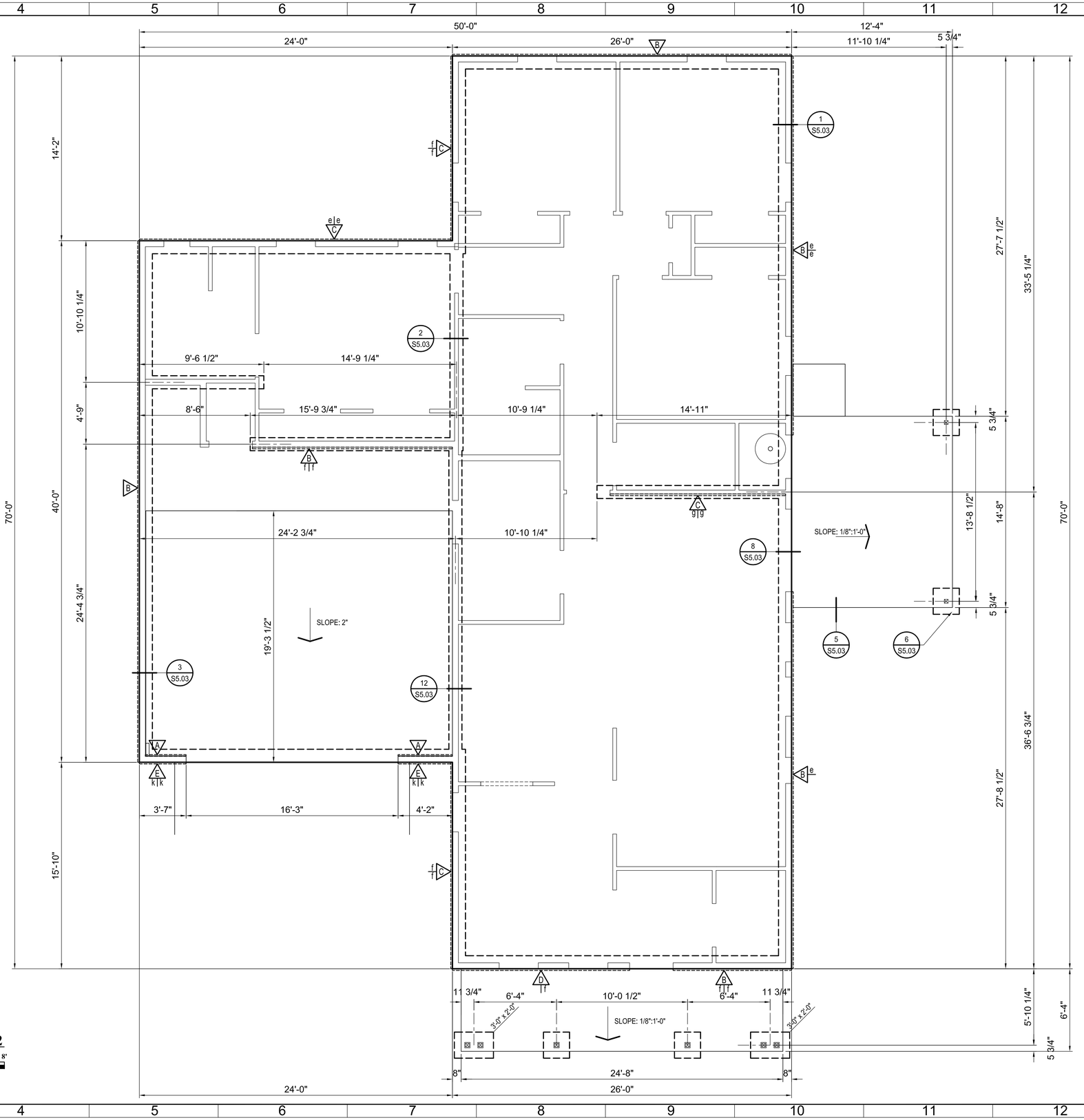

NOTES:
(1) VERIFY GARAGE DOOR OPENING DIMENSION WITH GARAGE DOOR MANUFACTURER
(2) INTERIOR FOOTINGS UNDER SHEAR WALLS ARE DEEPER THAN STANDARD. SEE DETAILS FOR CORRECT DEPTHS.

1 FOUNDATION PLAN- BUILDING TYPE 402

1/4"=1'-0"

0 2' 4' 8'

Atlantic COMMUNITIES
Marine Corps
A Lend Lease Community

INCIDENT & INJURY FREE
SIN LESIÓN O ACCIDENTE

LOVE SAFE WORK SAFE · VIVA SEGURO TRABAJE SEGURO

Actus
Lend Lease

Date:	Issue:	Date:	Issue:

100% SUBMITTAL
02-08-2011

Court Street Engineering
1008 Harrison St.
Lynchburg, Virginia 24504
(434) 846-3669 fax (434) 846-4230

NORTH CAROLINA PROFESSIONAL SEAL 037583 ENGINEER SAMUEL K. ROSKELLEY

PHASE 3
50 NEW HOMES AT KNOX LANDING
CAMP LEJEUNE NORTH CAROLINA

FOUNDATION PLAN BUILDING TYPE 402

Project No:	10-003
Drawn:	RHA
Checked:	RHA
Approved:	SKR
*Scale:	1/4"=1'-0"

*use graphic scales if sheet size varies from 22 x 34

SHEET 36 OF 72

S1.04

S:\Lejeune redebt\Knox Cove I\Structural\S1-04.dwg Feb 08, 2011 - 10:38am

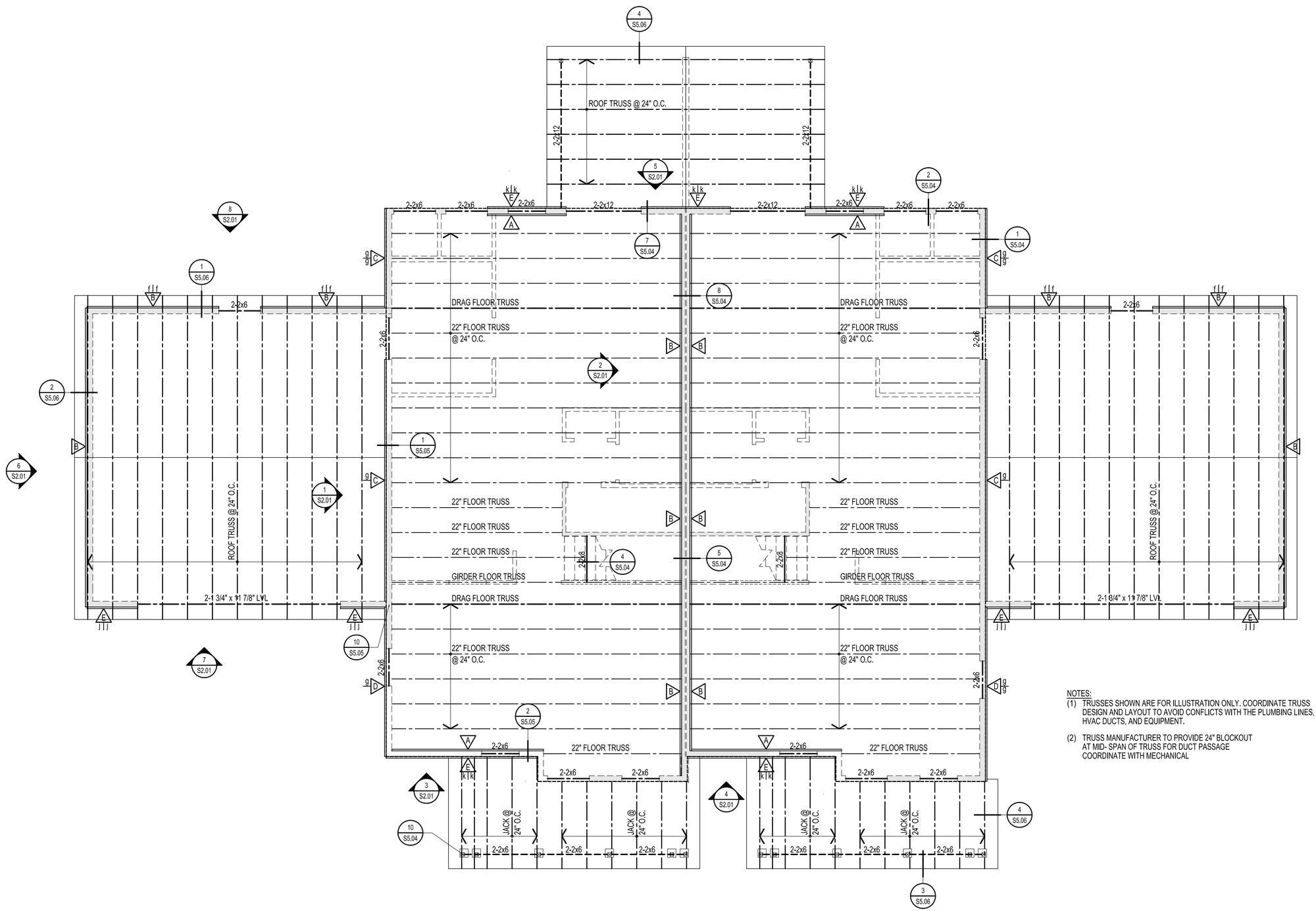

1 2ND FLOOR & LOW ROOF FRAMING PLAN- BUILDING TYPE 401a

1/4"=1'-0"

NOTES:

(1) TRUSSES SHOWN ARE FOR ILLUSTRATION ONLY. COORDINATE TRUSS DESIGN AND LAYOUT TO AVOID CONFLICTS WITH THE PLUMBING LINES, HVAC DUCTS, AND EQUIPMENT.

(2) TRUSS MANUFACTURER TO PROVIDE 24" BLOCKOUT AT MID- SPAN OF TRUSS FOR DUCT PASSAGE COORDINATE WITH MECHANICAL

Atlantic COMMUNITIES
Marine Corps
A Lend Lease Community

INCIDENT & INJURY FREE
SIN LESIÓN O ACCIDENTE

LOVE SAFE WORK SAFE · VIVA SEGURO TRABAJE SEGURO

Actus
Lend Lease

Date:	Issue:
Date:	Issue:

100% SUBMITTAL
02-08-2011

Court Street
Engineering
1008 Harrison St.
Lynchburg, Virginia 24504
(434) 846-3669 fax (434) 846-4230

NORTH CAROLINA PROFESSIONAL SEAL 037593 ENGINEER SAMUEL K. ROSKELLEY

PHASE 3
50 NEW HOMES AT KNOX LANDING
CAMP LEJEUNE NORTH CAROLINA

2ND FLOOR & LOW ROOF FRAMING PLAN BUILDING TYPE 401a

Project No:	10-003
Drawn:	RHA
Checked:	RHA
Approved:	SKR
*Scale:	1/4"=1'-0"

*use graphic scales if sheet size varies from 22 x 34

SHEET 37 OF 72

S1.05

S:\Lejeune redet\Knox Cove II\Structural\S1-05.dwg Feb 08, 2011 - 10:37am

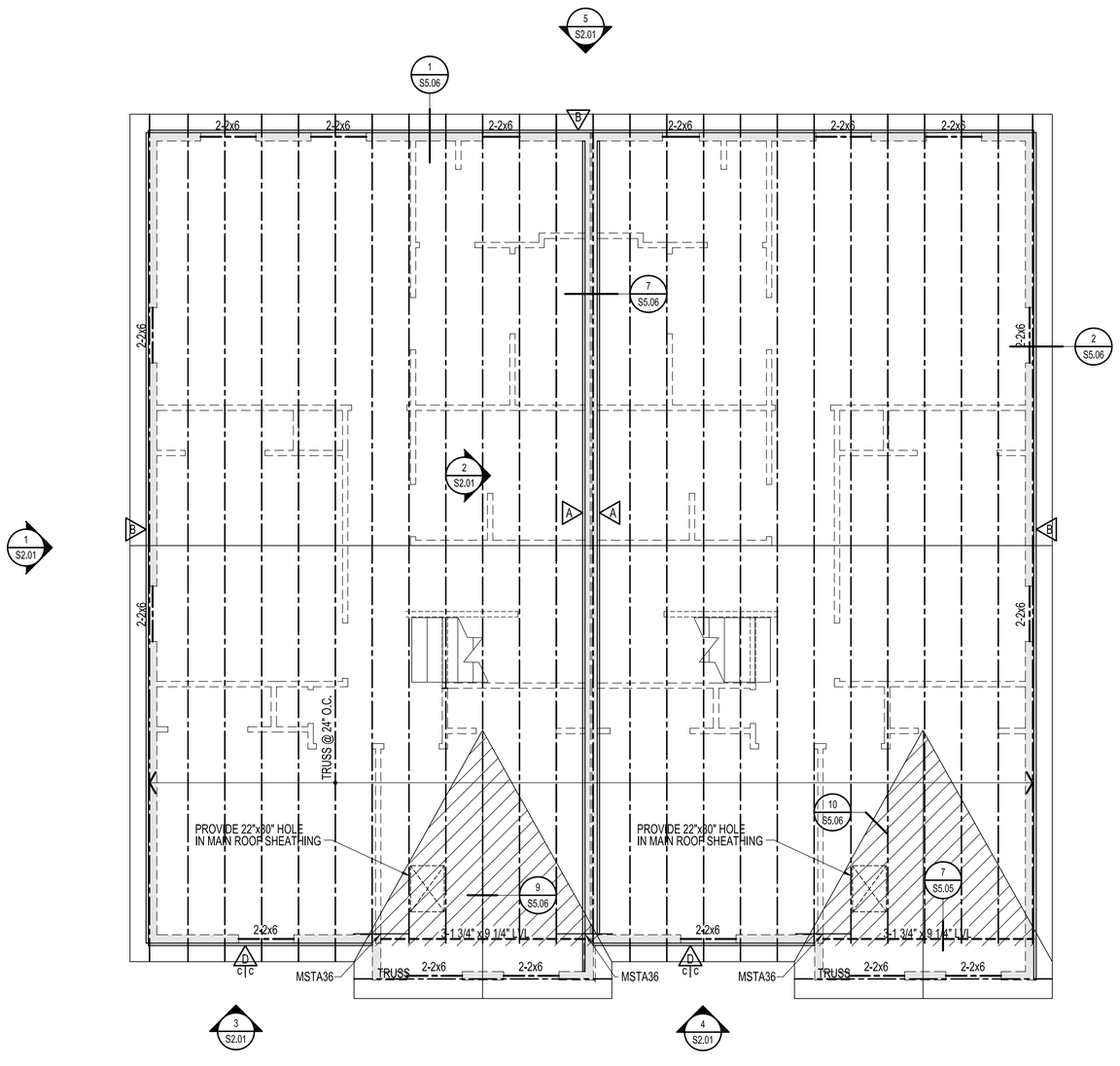

NOTES:
(1) TRUSSES SHOWN ARE FOR ILLUSTRATION ONLY. COORDINATE TRUSS DESIGN AND LAYOUT TO AVOID CONFLICTS WITH THE PLUMBING LINES, HVAC DUCTS, AND EQUIPMENT.

1 UPPER FRAMING PLAN- BUILDING TYPE 401a
1/4"=1'-0"

Atlantic COMMUNITIES
Marine Corps
A Lend Lease Community

INCIDENT & INJURY FREE
SIN LESIÓN O ACCIDENTE
LIVE SAFE WORK SAFE
VIVA SEGURO TRABAJE SEGURO

Actus
Lend Lease

Date:	Issue:

100% SUBMITTAL
02-08-2011

Court Street Engineering
1008 Harrison St.
Lynchburg, Virginia 24504
(434) 846-3669 fax (434) 846-4230

NORTH CAROLINA PROFESSIONAL SEAL 037503 ENGINEER SAMUEL K. ROSKELLEY

PHASE 3
50 NEW HOMES AT KNOX LANDING
CAMP LEJEUNE NORTH CAROLINA

UPPER ROOF FRAMING PLAN
BUILDING TYPE 401a

Project No:	10-003
Drawn:	RHA
Checked:	RHA
Approved:	SKR
*Scale:	1/4"=1'-0"

*use graphic scales if sheet size varies from 22 x 34

SHEET 38 OF 72

S1.06

S:\Lejeune redebut\Knox Cove II\Structural\S1-06.dwg Feb 08, 2011 - 10:37am

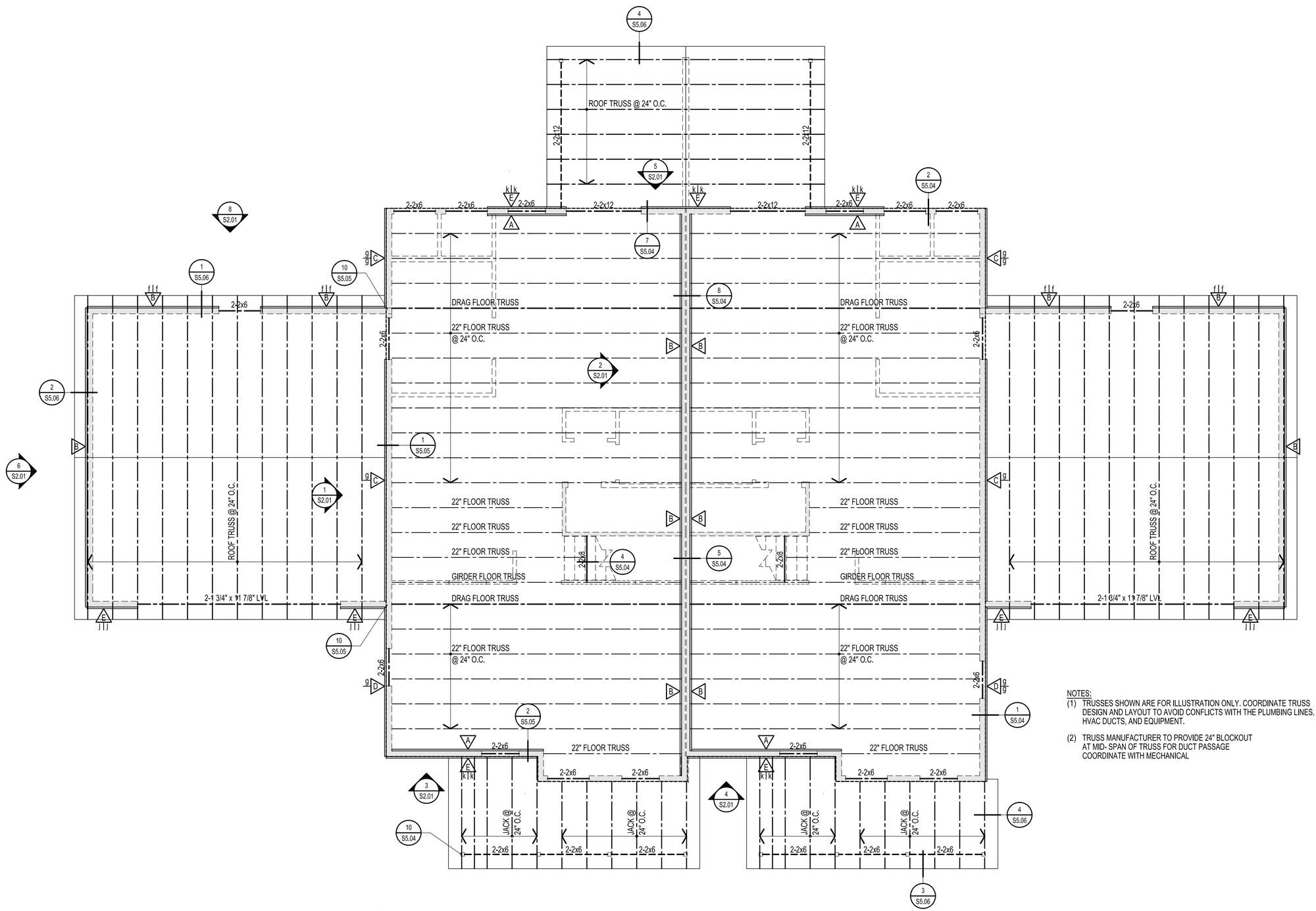

1 2ND FLOOR & LOW ROOF FRAMING PLAN- BUILDING TYPE 401b

1/4"=1'-0"

NOTES:

(1) TRUSSES SHOWN ARE FOR ILLUSTRATION ONLY. COORDINATE TRUSS DESIGN AND LAYOUT TO AVOID CONFLICTS WITH THE PLUMBING LINES, HVAC DUCTS, AND EQUIPMENT.

(2) TRUSS MANUFACTURER TO PROVIDE 24" BLOCKOUT AT MID- SPAN OF TRUSS FOR DUCT PASSAGE COORDINATE WITH MECHANICAL

Atlantic COMMUNITIES
Marine Corps
A Lend Lease Community

INCIDENT & INJURY FREE
SIN LESIÓN O ACCIDENTE

LOVE SAFE WORK SAFE · VIVA SEGURO TRABAJE SEGURO

Actus
Lend Lease

Date:	Issue:	Date:	Issue:

100% SUBMITTAL
02-08-2011

Court Street
Engineering
1008 Harrison St.
Lynchburg, Virginia 24504
(434) 846-3669 fax (434) 846-4230

NORTH CAROLINA PROFESSIONAL SEAL 037593 ENGINEER SAMUEL K. ROSKELLEY

PHASE 3
50 NEW HOMES AT KNOX LANDING
CAMP LEJEUNE NORTH CAROLINA

2ND FLOOR & LOW ROOF FRAMING PLAN BUILDING TYPE 401b

Project No:	10-003
Drawn:	RHA
Checked:	RHA
Approved:	SKR
*Scale:	1/4"=1'-0"

*use graphic scales if sheet size varies from 22 x 34

SHEET 39 OF 72

S1.07

S:\Lejeune redet\Knox Cove II\Structural\S1-07.dwg Feb 08, 2011 - 10:37am

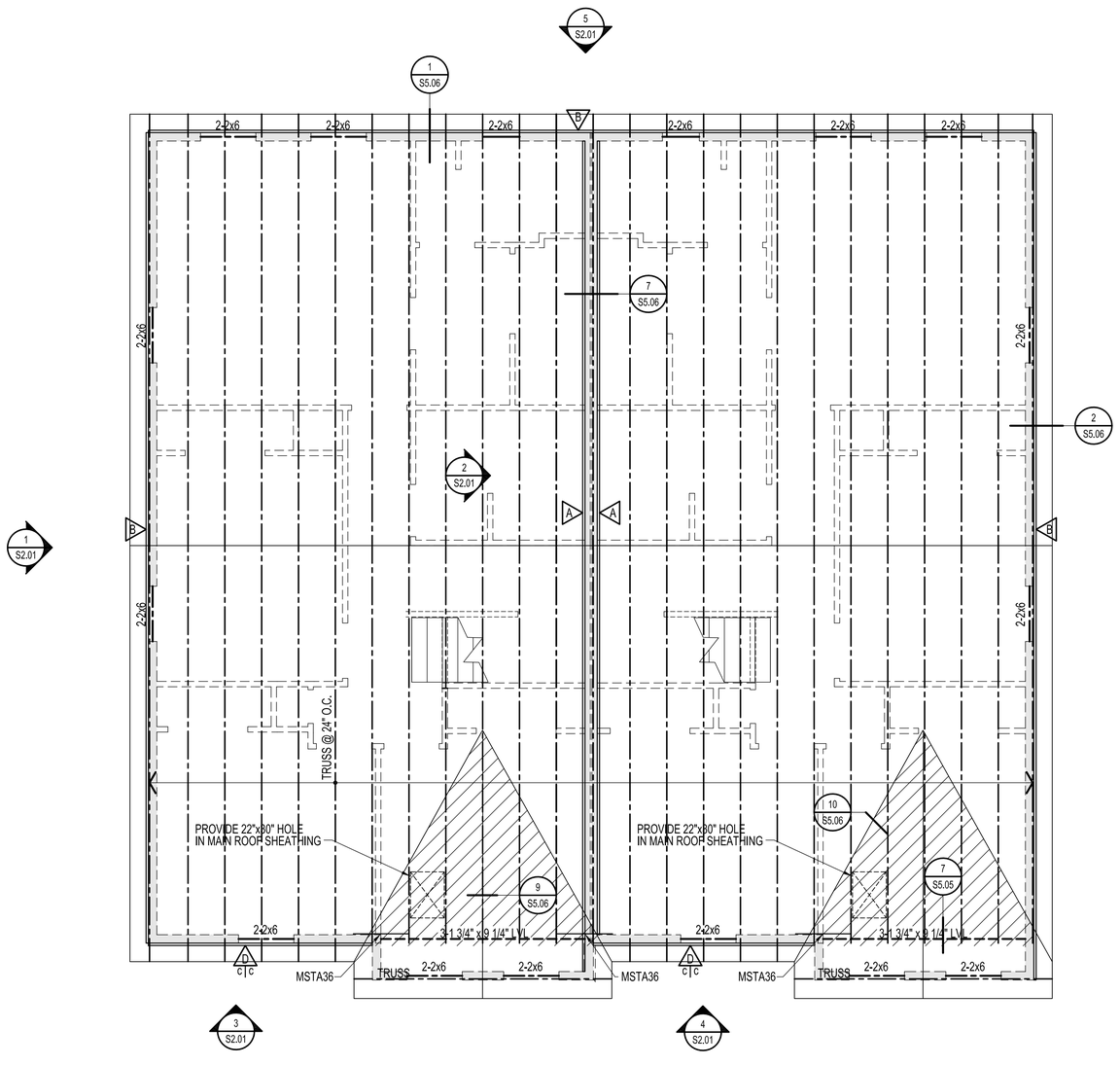

NOTES:
(1) TRUSSES SHOWN ARE FOR ILLUSTRATION ONLY. COORDINATE TRUSS DESIGN AND LAYOUT TO AVOID CONFLICTS WITH THE PLUMBING LINES, HVAC DUCTS, AND EQUIPMENT.

1 UPPER FRAMING PLAN- BUILDING TYPE 401b
1/4"=1'-0"

Atlantic COMMUNITIES
Marine Corps
A Lend Lease Community

INCIDENT & INJURY FREE
SIN LESIÓN O ACCIDENTE
LIVE SAFE WORK SAFE
VIVA SEGURO TRABAJE SEGURO

Actus
Lend Lease

Date:	Issue:

100% SUBMITTAL
02-08-2011

Court Street Engineering
1008 Harrison St.
Lynchburg, Virginia 24504
(434) 846-3669 fax (434) 846-4230

NORTH CAROLINA PROFESSIONAL SEAL 037503 ENGINEER SAMUEL K. ROSKELLEY

PHASE 3
50 NEW HOMES AT KNOX LANDING
CAMP LEJEUNE NORTH CAROLINA

UPPER ROOF FRAMING PLAN
BUILDING TYPE 401b

Project No:	10-003
Drawn:	RHA
Checked:	RHA
Approved:	SKR
*Scale:	1/4"=1'-0"

*use graphic scales if sheet size varies from 22 x 34

SHEET 40 OF 72

S1.08

S:\Lejeune redebut\Knox Cove II\Structural\S1-08.dwg Feb 08, 2011 - 10:36am

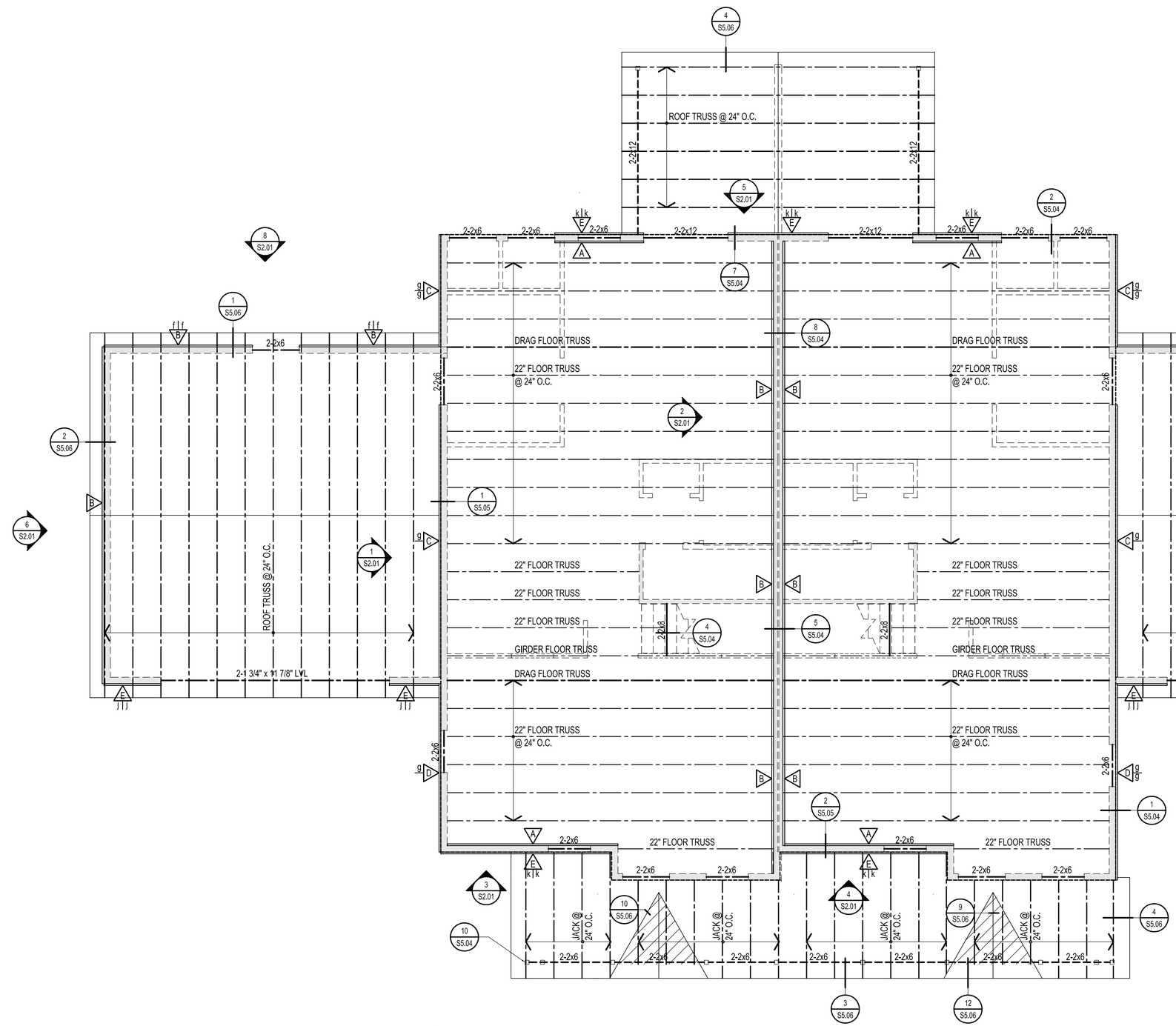

NOTES:
(1) TRUSSES SHOWN ARE FOR ILLUSTRATION ONLY. COORDINATE TRUSS DESIGN AND LAYOUT TO AVOID CONFLICTS WITH THE PLUMBING LINES, HVAC DUCTS, AND EQUIPMENT.

(2) TRUSS MANUFACTURER TO PROVIDE 24" BLOCKOUT AT MID- SPAN OF TRUSS FOR DUCT PASSAGE COORDINATE WITH MECHANICAL

1 2ND FLOOR & LOW ROOF FRAMING PLAN- BUILDING TYPE 401c
1/4"=1'-0"

Atlantic COMMUNITIES
Marine Corps
A Lend Lease Community

INCIDENT & INJURY FREE
SIN LESIÓN O ACCIDENTE
LIVE SAFE WORK SAFE
VIVA SEGURO TRABAJE SEGURO

Actus
Lend Lease

Date:	Issue:	Date:	Issue:	
				100% SUBMITTAL 02-08-2011

Court Street
Engineering
1008 Harrison St.
Lynchburg, Virginia 24504
(434) 846-3669 fax (434) 846-4230

NORTH CAROLINA PROFESSIONAL SEAL 037593 ENGINEER SAMUEL K. ROSKELLEY

PHASE 3
50 NEW HOMES AT KNOX LANDING
CAMP LEJEUNE NORTH CAROLINA

2ND FLOOR & LOW ROOF FRAMING PLAN BUILDING TYPE 401c

Project No:	10-003
Drawn:	RHA
Checked:	RHA
Approved:	SKR
*Scale:	1/4"=1'-0"

*use graphic scales if sheet size varies from 22 x 34

SHEET 41 OF 72

S1.09

S:\Lejeune redet\Knox Cove II\Structural\S1-09.dwg Feb 08, 2011 - 10:36am

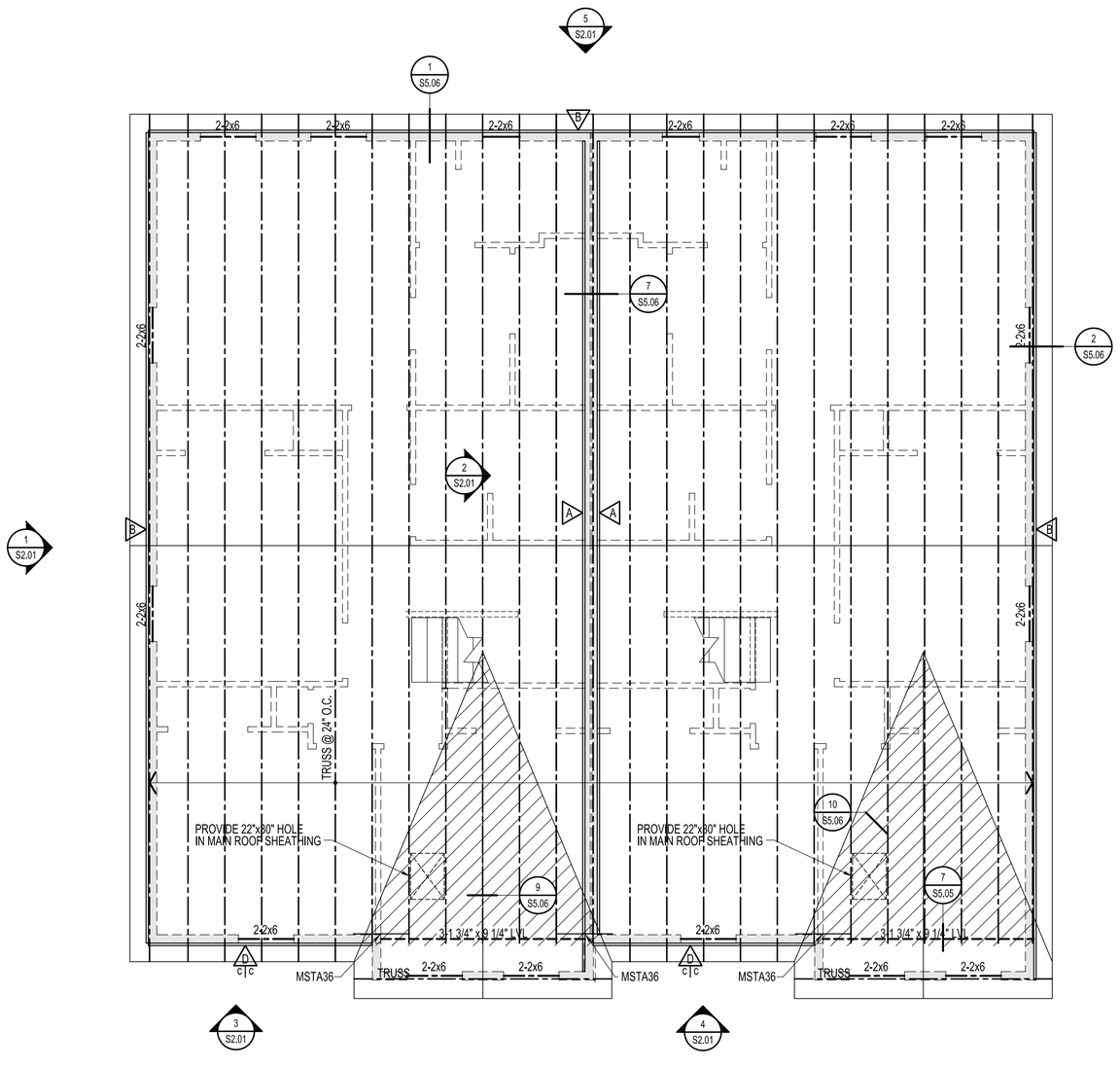

NOTES:
(1) TRUSSES SHOWN ARE FOR ILLUSTRATION ONLY. COORDINATE TRUSS DESIGN AND LAYOUT TO AVOID CONFLICTS WITH THE PLUMBING LINES, HVAC DUCTS, AND EQUIPMENT.

1 UPPER FRAMING PLAN- BUILDING TYPE 401c
1/4"=1'-0"

Atlantic COMMUNITIES
Marine Corps
A Lend Lease Community

INCIDENT & INJURY FREE
SIN LESIÓN O ACCIDENTE
LIVE SAFE WORK SAFE
VIVA SEGURO TRABAJE SEGURO

Actus
Lend Lease

Date:	Issue:

100% SUBMITTAL
02-08-2011

Court Street
Engineering
1008 Harrison St.
Lynchburg, Virginia 24504
(434) 846-3669 fax (434) 846-4230

NORTH CAROLINA PROFESSIONAL SEAL 037503 ENGINEER SAMUEL K. ROSKELLEY

PHASE 3
50 NEW HOMES AT KNOX LANDING
CAMP LEJEUNE NORTH CAROLINA

UPPER ROOF FRAMING PLAN
BUILDING TYPE 401c

Project No:	10-003
Drawn:	RHA
Checked:	RHA
Approved:	SKR
*Scale:	1/4"=1'-0"

*use graphic scales if sheet size varies from 22 x 34

SHEET 42 OF 72

S1.10

S:\Lejeune redebt\Knox Cove II\Structural\S1-10.dwg Feb 08, 2011 - 10:35am

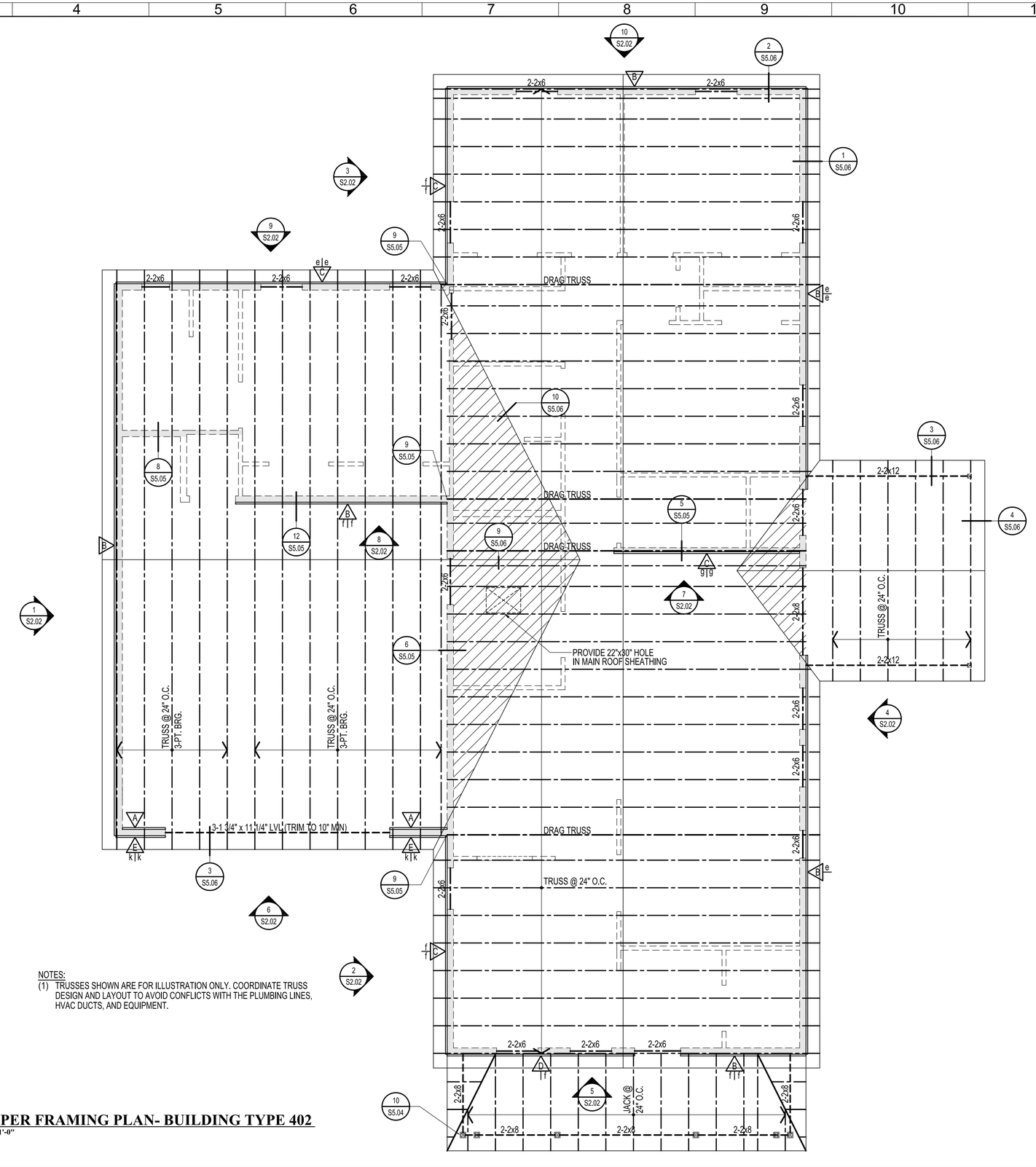

NOTES:
(1) TRUSSES SHOWN ARE FOR ILLUSTRATION ONLY. COORDINATE TRUSS DESIGN AND LAYOUT TO AVOID CONFLICTS WITH THE PLUMBING LINES, HVAC DUCTS, AND EQUIPMENT.

1 UPPER FRAMING PLAN- BUILDING TYPE 402
1/4"=1'-0"

Atlantic COMMUNITIES
Marine Corps
A Lend Lease Community

INCIDENT & INJURY FREE
SIN LESIÓN O ACCIDENTE

Actus
Lend Lease

Date:	Issue:

100% SUBMITTAL
02-08-2011

Court Street
Engineering
1008 Harrison St.
Lynchburg, Virginia 24504
(434) 846-3669 fax (434) 846-4230

NORTH CAROLINA PROFESSIONAL SEAL 037503 ENGINEER SAMUEL K. ROSKELLEY

PHASE 3
50 NEW HOMES AT KNOX LANDING
CAMP LEJEUNE NORTH CAROLINA

ROOF FRAMING PLAN
BUILDING TYPE 402

Project No:	10-003
Drawn:	RHA
Checked:	RHA
Approved:	SKR
*Scale:	1/4"=1'-0"

*use graphic scales if sheet size varies from 22 x 34

SHEET 43 OF 72

S1.11

S:\Lejeune redebt\Knox Cove II\Structural\S1-11.dwg Feb 08, 2011 - 10:35am

NOTES:
(1) SEE SHEET S6.01 FOR SHEAR AND HOLD DOWN SCHEDULES.
(2) SEE PLANS FOR EXACT LOCATION OF SHEAR WALLS

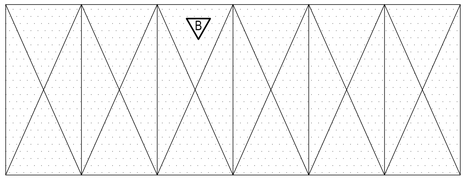

6 SHEAR WALL ELEVATION
1/4"=1'-0"

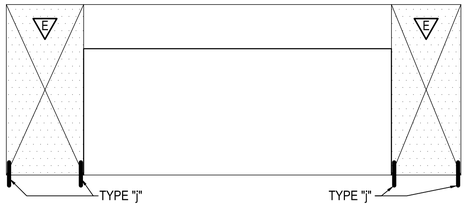

7 SHEAR WALL ELEVATION
1/4"=1'-0"

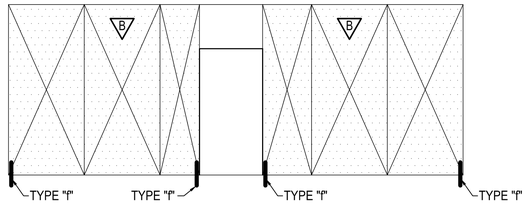

8 SHEAR WALL ELEVATION
1/4"=1'-0"

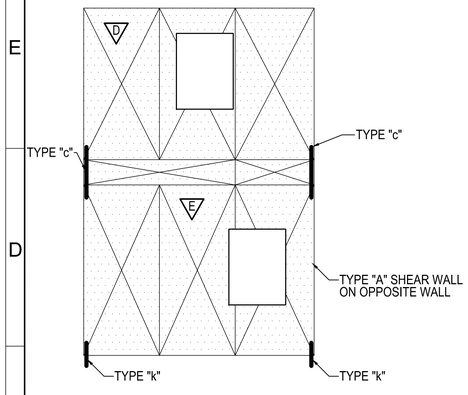

3 SHEAR WALL ELEVATION
1/4"=1'-0"

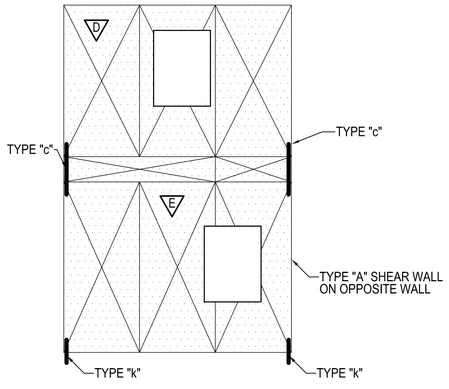

4 SHEAR WALL ELEVATION
1/4"=1'-0"

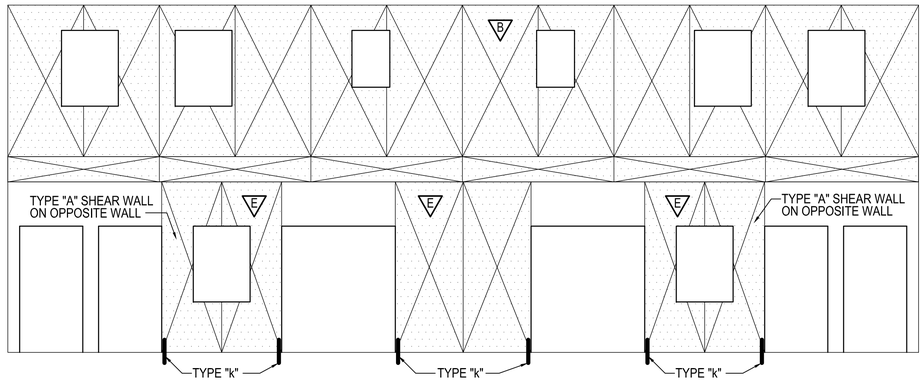

5 SHEAR WALL ELEVATION
1/4"=1'-0"

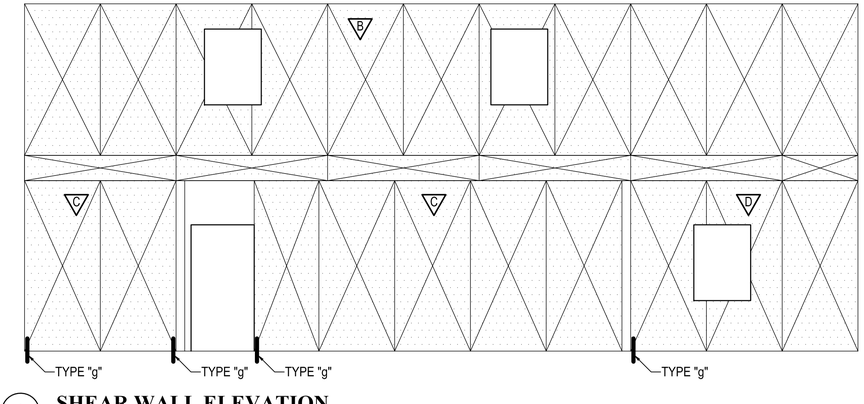

1 SHEAR WALL ELEVATION
1/4"=1'-0"

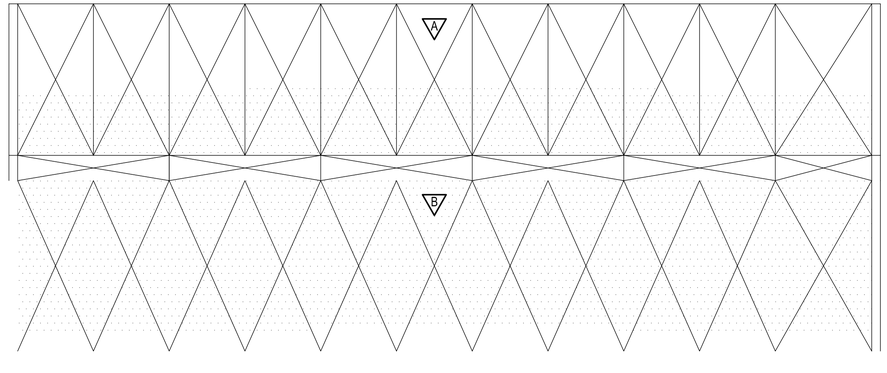

2 SHEAR WALL ELEVATION
1/4"=1'-0"

Atlantic COMMUNITIES
Marine Corps
A Lend Lease Community

INCIDENT & INJURY FREE
SIN LESIÓN O ACCIDENTE
LOVE SAFE WORK SAFE
VIVA SEGURO TRABAJE SEGURO

Actus
Lend Lease

Date:	Issue:
Date:	Issue:

100% SUBMITTAL
02-08-2011

Court Street
Engineering
1008 Harrison St.
Lynchburg, Virginia 24504
(434) 846-3669 fax (434) 846-4230

NORTH CAROLINA PROFESSIONAL SEAL 037503 ENGINEER SAMUEL K. ROSKELLEY

PHASE 3
50 NEW HOMES AT KNOX LANDING
CAMP LEJEUNE NORTH CAROLINA

SHEAR WALL ELEVATIONS
BUILDING TYPE 401

Project No:	10-003
Drawn:	RHA
Checked:	RHA
Approved:	SKR
*Scale:	1/4"=1'-0"

*use graphic scales if sheet size varies from 22 x 34

SHEET 44 OF 72

S2.01

S:\Lejeune redebt\Knox Cove II\Structural\S2-01.dwg Feb 08, 2011 - 10:34am

NOTES:
(1) SEE SHEET S6.01 FOR SHEAR AND HOLD DOWN SCHEDULES.
(2) SEE PLANS FOR EXACT LOCATION OF SHEAR WALLS

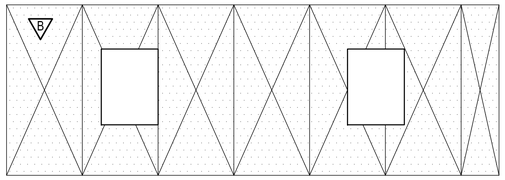

10 SHEAR WALL ELEVATION
1/4"=1'-0"

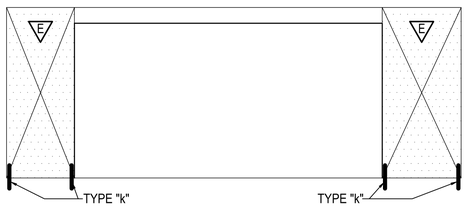

6 SHEAR WALL ELEVATION
1/4"=1'-0"

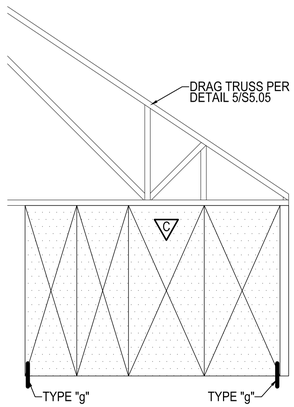

7 SHEAR WALL ELEVATION
1/4"=1'-0"

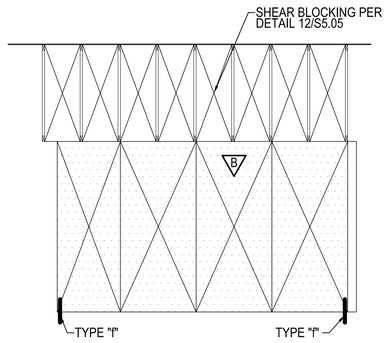

8 SHEAR WALL ELEVATION
1/4"=1'-0"

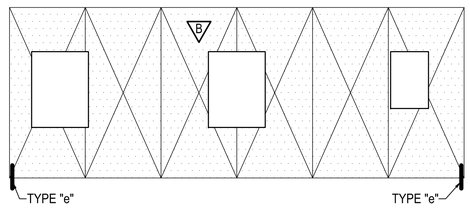

9 SHEAR WALL ELEVATION
1/4"=1'-0"

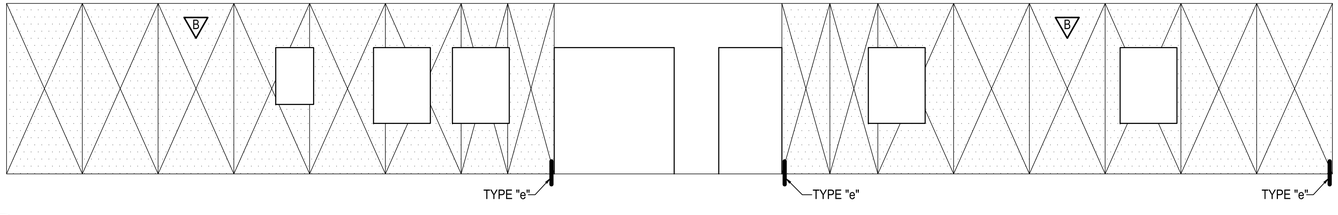

4 SHEAR WALL ELEVATION
1/4"=1'-0"

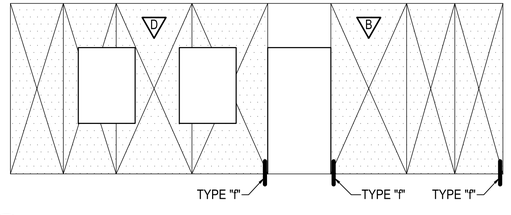

5 SHEAR WALL ELEVATION
1/4"=1'-0"

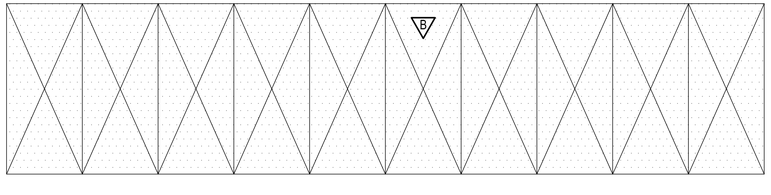

1 SHEAR WALL ELEVATION
1/4"=1'-0"

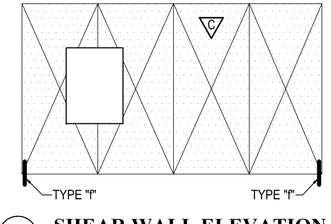

2 SHEAR WALL ELEVATION
1/4"=1'-0"

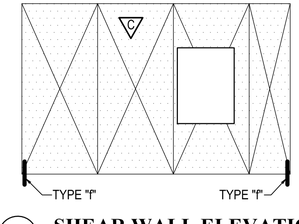

3 SHEAR WALL ELEVATION
1/4"=1'-0"

Atlantic COMMUNITIES
Marine Corps
A Lend Lease Community

INCIDENT & INJURY FREE
SIN LESIÓN O ACCIDENTE
LIVE SAFE WORK SAFE
VIVA SEGURO TRABAJE SEGURO

Actus
Lend Lease

Date:	Issue:	Date:	Issue:

100% SUBMITTAL
02-08-2011

Court Street
Engineering
1008 Harrison St.
Lynchburg, Virginia 24504
(434) 846-3669 fax (434) 846-4230

NORTH CAROLINA PROFESSIONAL SEAL 037503 ENGINEER SAMUEL K. ROSKELLEY

PHASE 3
50 NEW HOMES AT KNOX LANDING
CAMP LEJEUNE NORTH CAROLINA

SHEAR WALL ELEVATIONS
BUILDING TYPE 402

Project No:	10-003
Drawn:	RHA
Checked:	RHA
Approved:	SKR
*Scale:	1/4"=1'-0"

*use graphic scales if sheet size varies from 22 x 34

SHEET 45 OF 72

S2.02

S:\Lejeune redebt\Knox Cove II\Structural\S2-02.dwg Feb 08, 2011 - 10:34am

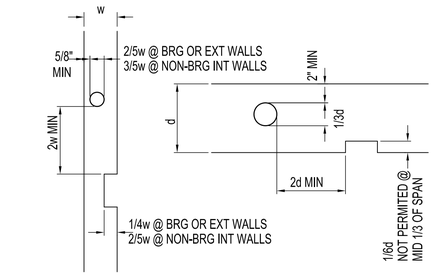

NOTES:
1. DIMENSIONS SHOWN ARE THE MAXIMUM PERMITTED AND INCLUDE OVER RUNS.
2. NOTCHING OR BORING OF BEAMS OR POSTS IS NOT PERMITTED.
3. NOTCHING OR BORING OF TOP PLATES AT SHEAR WALLS OR WALLS CONTINUOUS WITH SHEAR WALLS SHALL BE AS SHOWN FOR STUDS, EXCEPT THAT GREATER INTERRUPTIONS ARE PERMITTED IF STRAPS ARE PROVIDED PER "TOP PLATE SPLICE" DETAIL

1 NOTCHING AND BORING

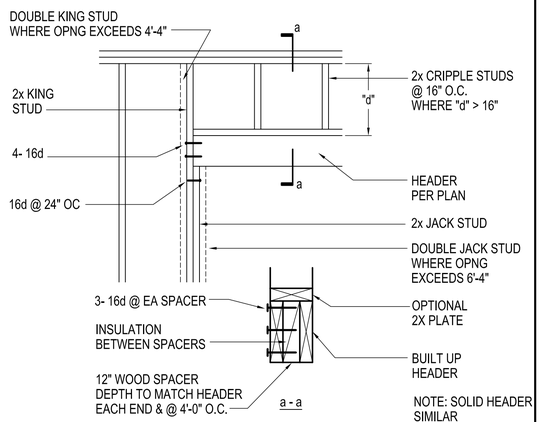

2 BEARING WALL HEADER

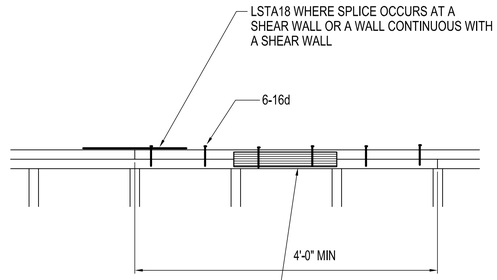

RPS18 EA SIDE WHERE NOTCHING OR BORING OF DOUBLE TOP PLATES IN EXCESS OF THAT PERMITTED FOR STUDS OCCURS AT A SHEAR WALL OR A WALL CONTINUOUS WITH A SHEAR WALL

4 TOP PLATE SPLICE

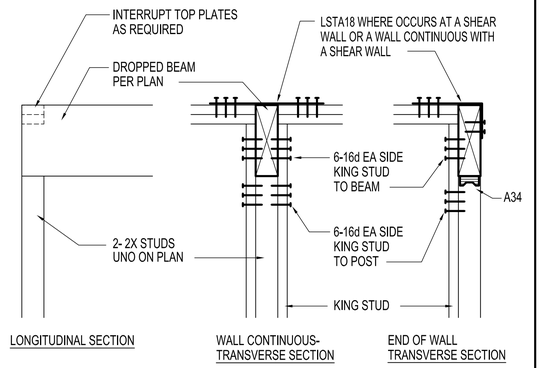

5 BEAM POCKET

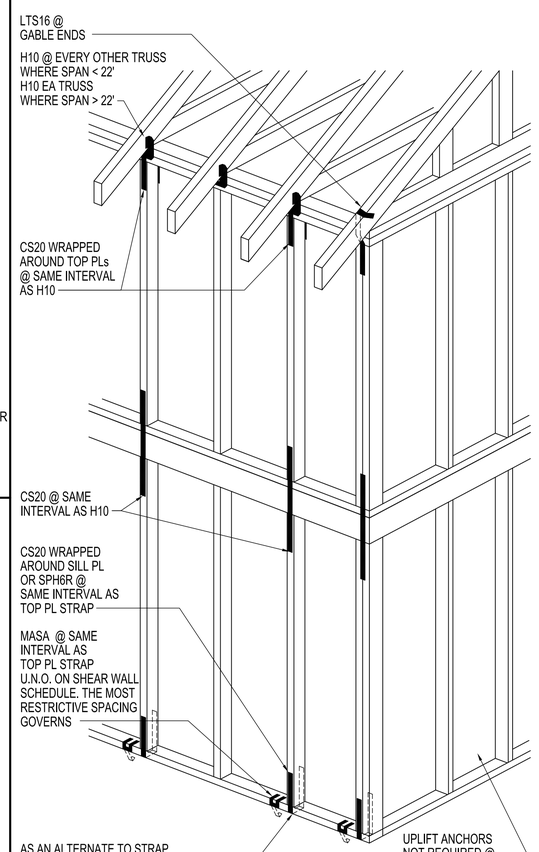

OPTION 1

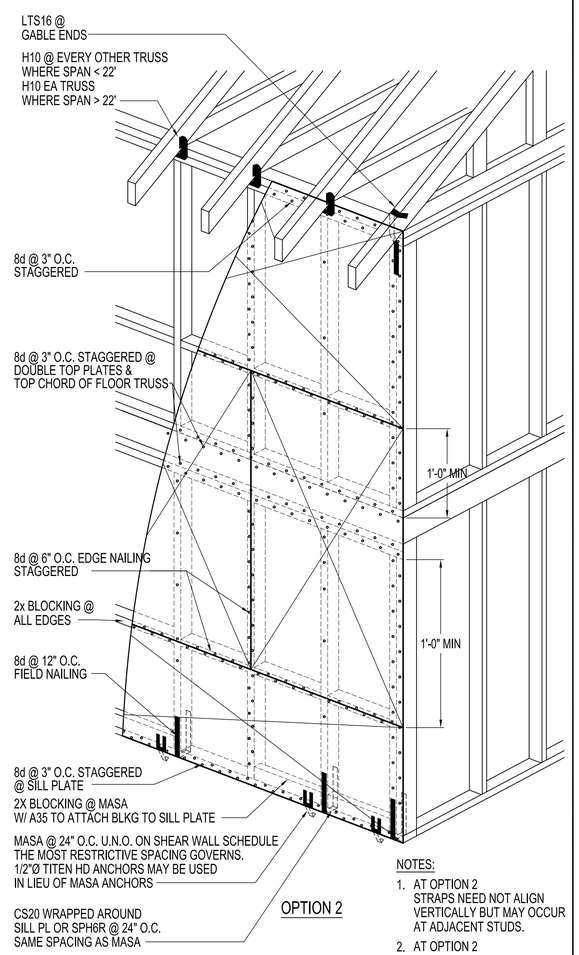

OPTION 2

NOTES:
1. AT OPTION 2 STRAPS NEED NOT ALIGN VERTICALLY BUT MAY OCCUR AT ADJACENT STUDS.
2. AT OPTION 2 STRAPS MAY OCCUR OVER OR UNDER SHEATHING
3. EDGE NAILING @ EDGE OF OPENINGS

7 UPLIFT ANCHORS

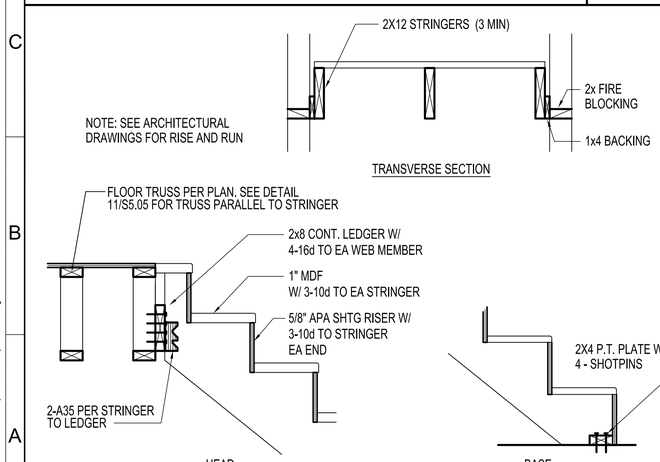

8 STAIR

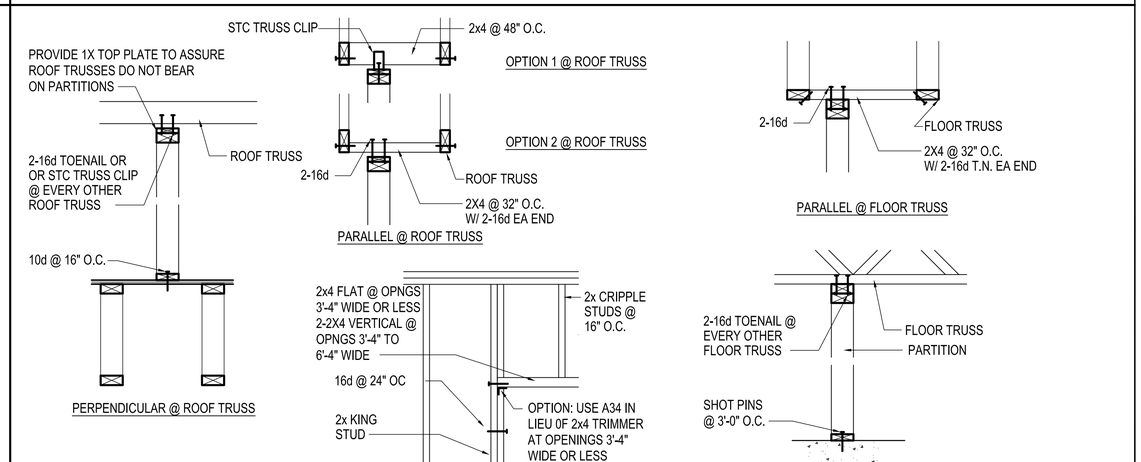

9 PARTITIONS

Atlantic COMMUNITIES
Marine Corps
A Land Lease Community

INCIDENT & INJURY FREE
SIN LESIÓN O ACCIDENTE
LIVE SAFE WORK SAFE
VIVA SEGURO TRABAJE SEGURO

Actus
Lend Lease

Date:	Issue:

100% SUBMITTAL
02-08-2011

Court Street
Engineering
1008 Harrison St.
Lynchburg, Virginia 24504
(434) 846-3669 fax (434) 846-4230

NORTH CAROLINA PROFESSIONAL SEAL 037593 ENGINEER SAMUEL K. ROSKELLEY

PHASE 3
50 NEW HOMES AT KNOX LANDING
CAMP LEJEUNE NORTH CAROLINA

TYPICAL DETAILS

Project No:	10-003
Drawn:	RHA
Checked:	RHA
Approved:	SKR
*Scale:	NONE

*use graphic scales if sheet size varies from 22 x 34

SHEET 46 OF 72

S5.01

S:\Lejeune redebt\Knox Cove I\Structural\S5-01.dwg Feb 08, 2011 - 10:30am

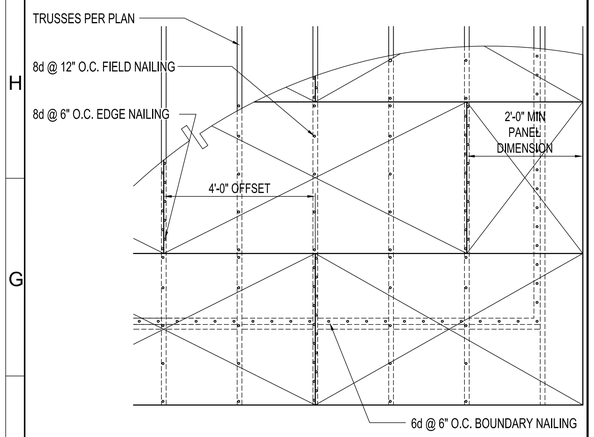

1 ROOF SHEATHING

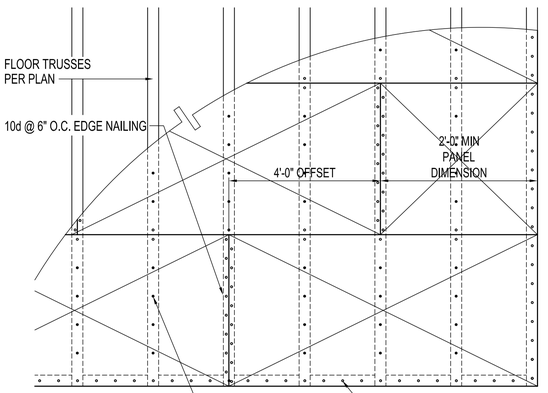

2 FLOOR SHEATHING

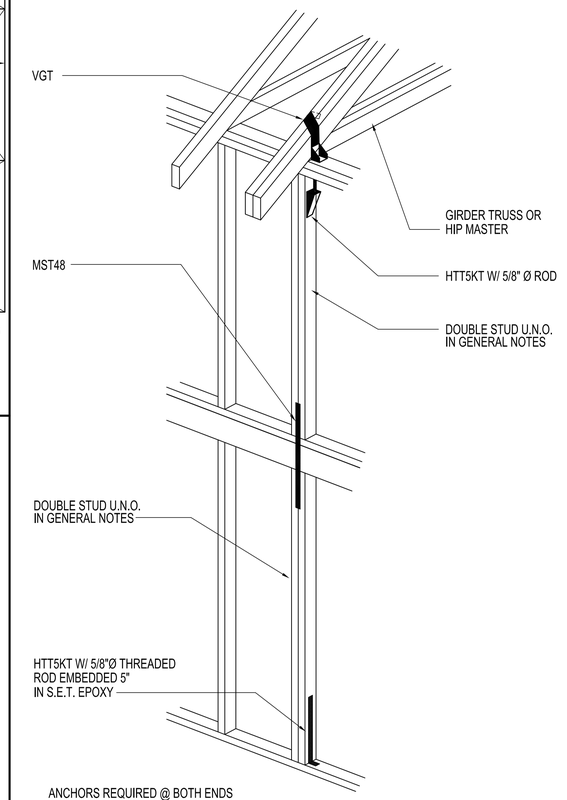

4 UPLIFT ANCHORS @ GIRDER TRUSS OR HIP MASTER

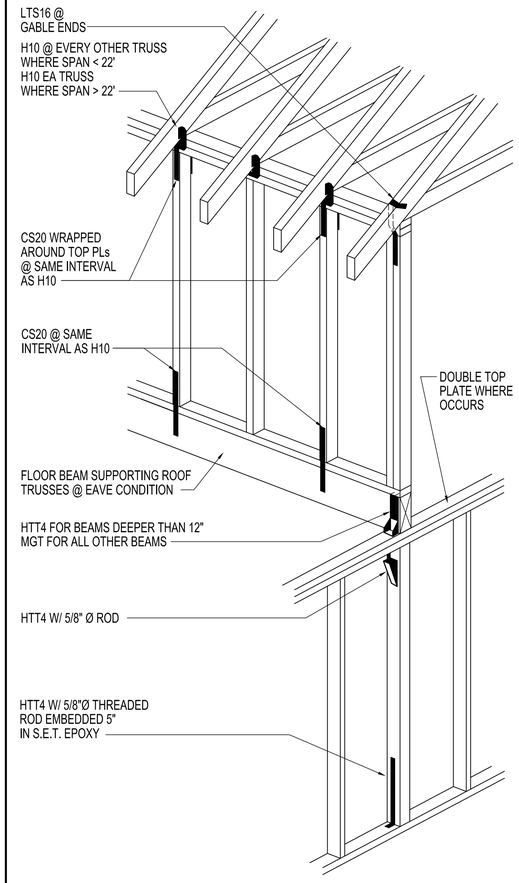

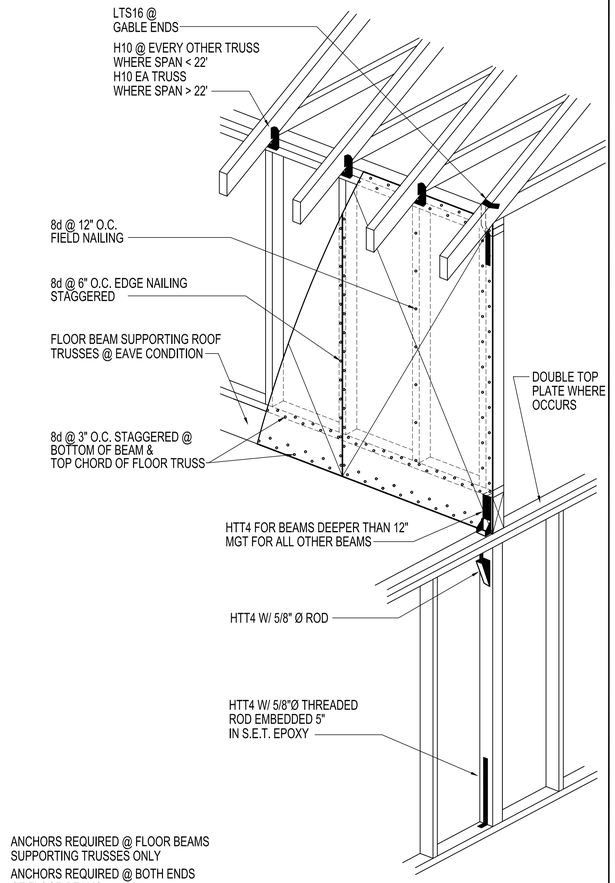

5 UPLIFT ANCHORS @ FLOOR BEAM

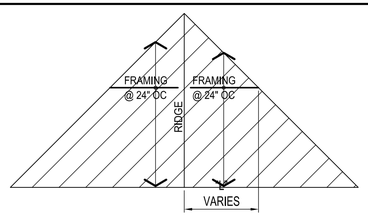

OVERFILL FRAMING SCHEDULE		
"L" MAX	FRAMING	RIDGE
7'-0"	2x4	2x6
11'-0"	2x6	2x8
14'-6"	2x8	2x10
18'-6"	2x10	2x12

OPTION 1: PROVIDE PRE-FABRICATED VALLEY TRUSSES OVER MAIN ROOF FRAMING

OPTION 2: PROVIDE PRE-FABRICATED VALLEY TRUSSES OVER MAIN ROOF SHEATHING

OPTION 3: PROVIDE OVERFILL FRAMING PER SCHEDULE

NOTE: AT ATTIC ACCESS OPENINGS INTO OVERFILL FRAMED AREAS, IT IS ACCEPTABLE TO ADD 2X4 VERTICAL WEB MEMBERS EACH SIDE OF OPENING AND REMOVE A PORTION OF THE VALLEY TRUSS BOTTOM CHORD

6 OVER FILL FRAMING

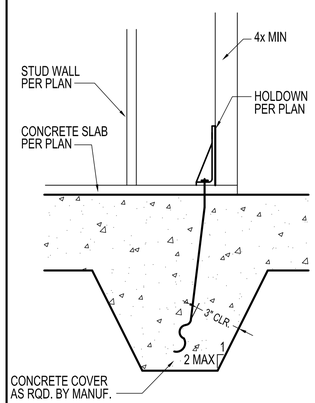

7 INTERIOR HOLD DOWN

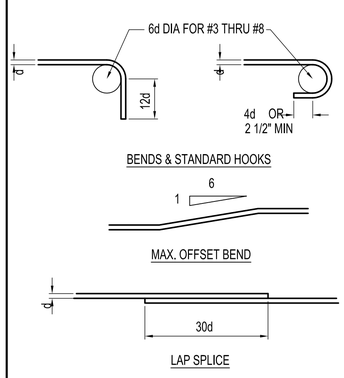

8 REINFORCING

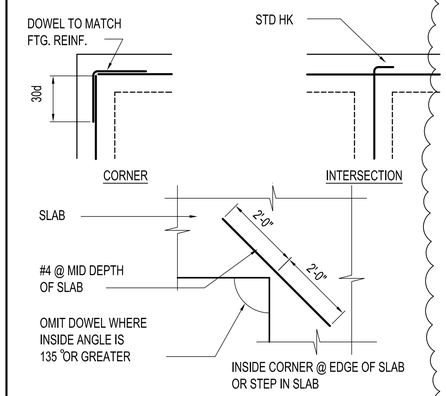

9 FOUNDATION INTERSECTIONS

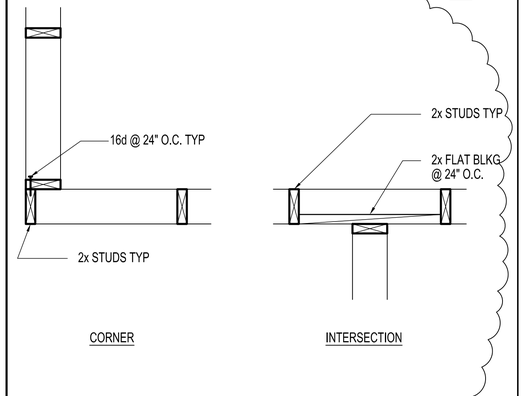

10 TYPICAL WALL INTERSECTION

UNLESS OTHERWISE NOTED

Atlantic COMMUNITIES Marine Corps — A Land Lease Community

INCIDENT & INJURY FREE
SIN LESIÓN O ACCIDENTE

LIVE SAFE WORK SAFE — VIVA SEGURO TRABAJE SEGURO

Actus Lend Lease

Date:	Issue:
02-08-11	100% SUBMITTAL
05-17-11	⚠ BULLETIN Nº 1

Court Street Engineering
1008 Harrison St.
Lynchburg, Virginia 24504
(434) 846-3669 fax (434) 846-4230

NORTH CAROLINA PROFESSIONAL SEAL 037593 ENGINEER SAMUEL K. ROSKELLEY

PHASE 3
50 NEW HOMES AT KNOX LANDING
CAMP LEJEUNE NORTH CAROLINA

TYPICAL DETAILS

Project No: 10-003
Drawn: RHA
Checked: RHA
Approved: SKR
*Scale: NONE
*use graphic scales if sheet size varies from 22 x 34

SHEET 47 OF 72

S5.02

S:\Lejeune redesk\Knox Cove I\Structural\S5-02.dwg May 12, 2011 - 2:04pm

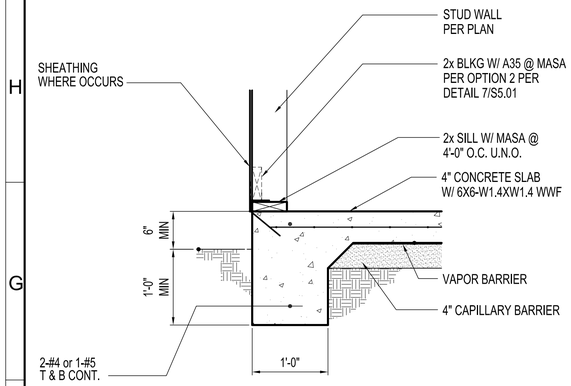

1 EXTERIOR FOOTING

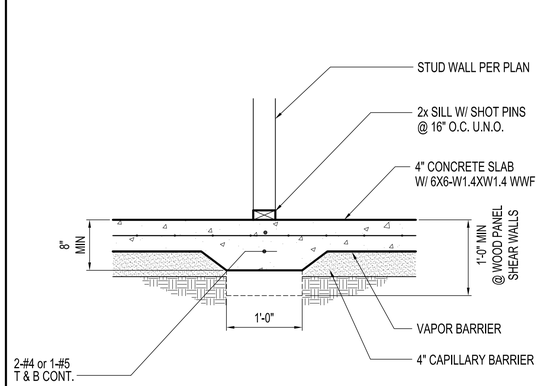

2 INTERIOR FOOTING

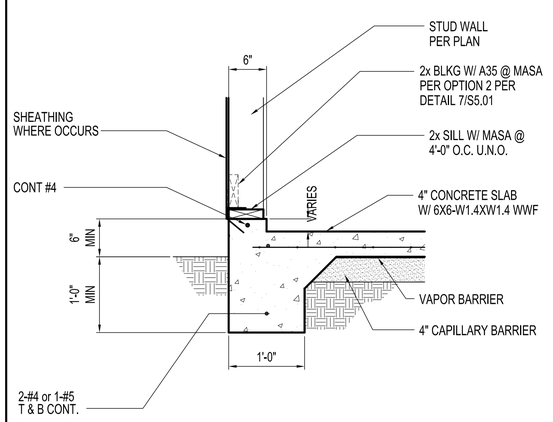

3 GARAGE FOOTING

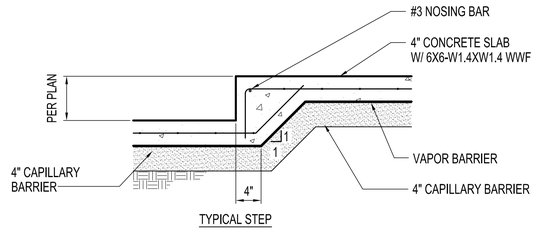

4 STEP IN SLAB

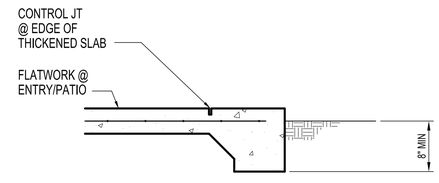

5 EDGE OF SLAB @
FRONT PORCH/SCREEN PORCH

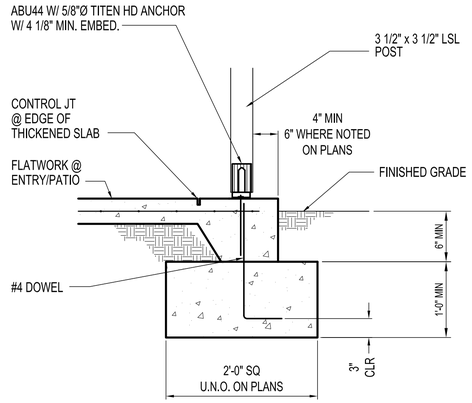

6 EXTERIOR PAD FOOTING

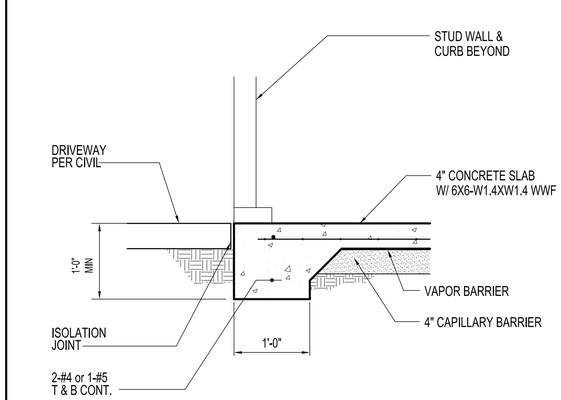

7 GARAGE OPENING

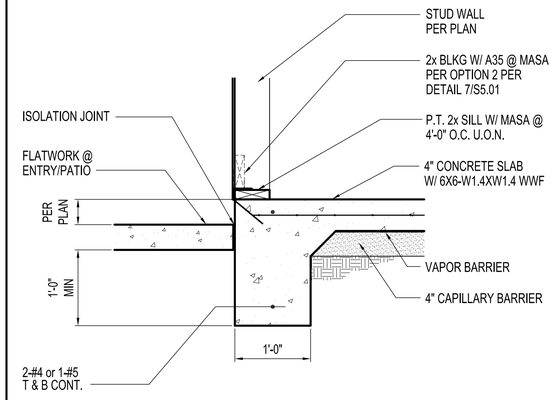

8 PATIO @ BUILDING

9 NOT USED

10 NOT USED

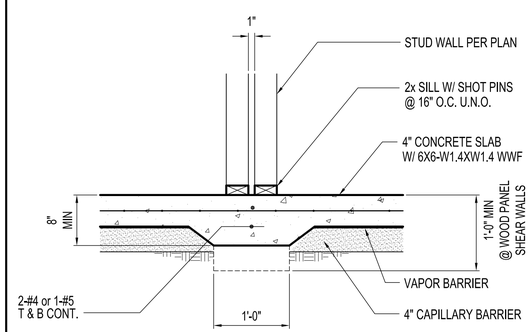

11 PARTY WALL

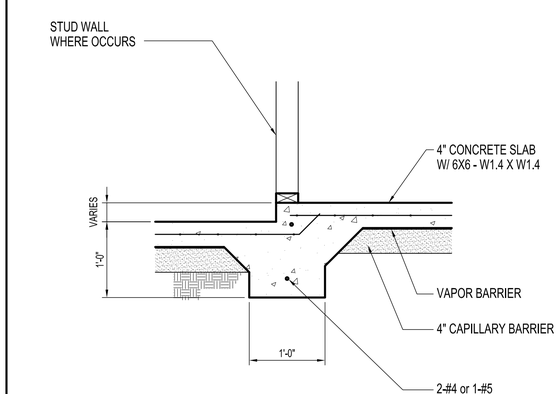

12 STEP IN SLAB

Atlantic COMMUNITIES
Marine Corps
A Land Lease Community

INCIDENT & INJURY FREE
SIN LESIÓN O ACCIDENTE
LIVE SAFE WORK SAFE
VIVA SEGURO TRABAJE SEGURO

Actus
Lend Lease

Date:	Issue:

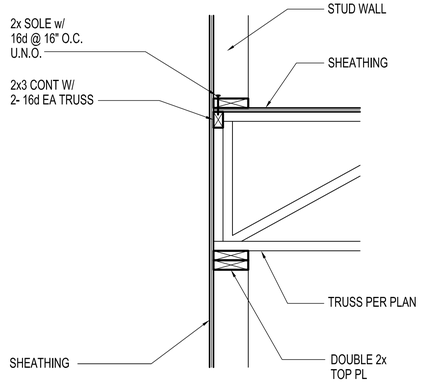

1 SECOND FLOOR

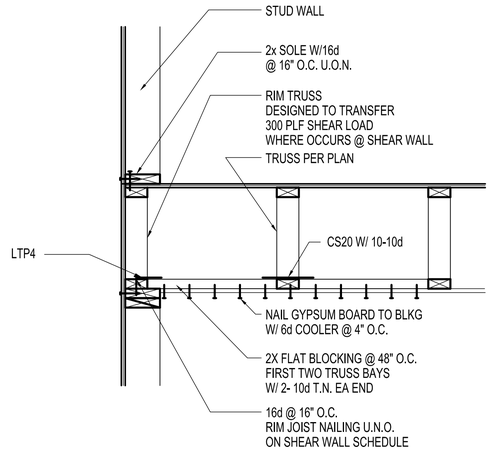

2 SECOND FLOOR

3 NOT USED

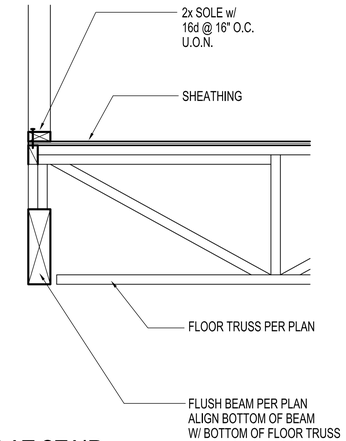

4 BEAM AT STAIR

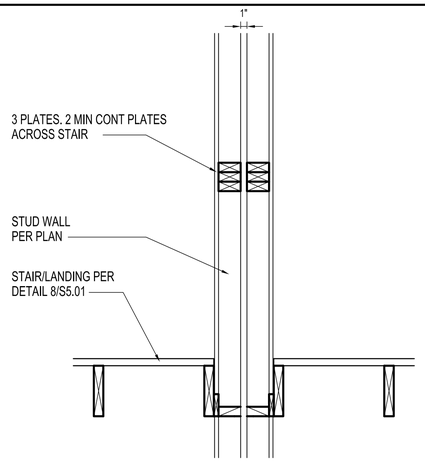

5 PARTY WALL AT STAIR

6 NOT USED

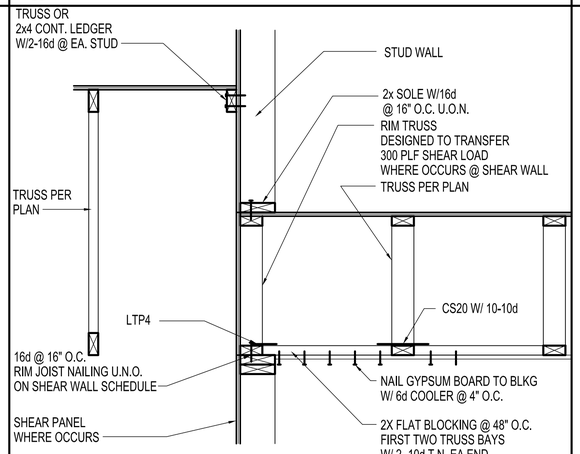

7 LOW ROOF @ SECOND FLOOR

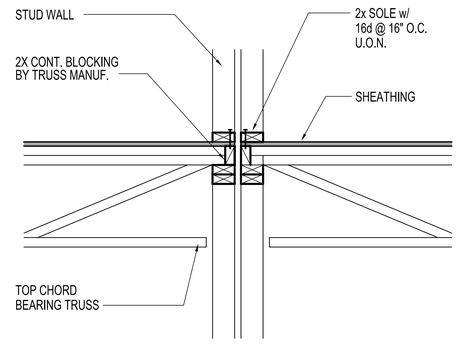

8 PARTY WALL

9 NOT USED

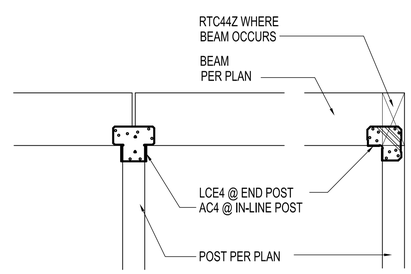

10 PORCH POST

11 NOT USED

12 NOT USED

Atlantic COMMUNITIES
Marine Corps
A Lend Lease Community

INCIDENT & INJURY FREE
SIN LESIÓN O ACCIDENTE

Actus
Lend Lease

Date:	Issue:	Date:	Issue:

100% SUBMITTAL
02-08-2011

Court Street
Engineering
1008 Harrison St.
Lynchburg, Virginia 24504
(434) 846-3669 fax (434) 846-4230

NORTH CAROLINA PROFESSIONAL SEAL 037593 ENGINEER SAMUEL K. ROSKELLEY

PHASE 3
50 NEW HOMES AT KNOX LANDING
CAMP LEJEUNE NORTH CAROLINA

STRUCTURAL DETAILS

Project No: 10-003
Drawn: RHA
Checked: RHA
Approved: SKR
*Scale: NONE
*use graphic scales if sheet size varies from 22 x 34

SHEET 49 OF 72

S5.04

S:\Lejeune redebt\Knox Cove II\Structural\S5-04.dwg Feb 08, 2011 - 10:28am

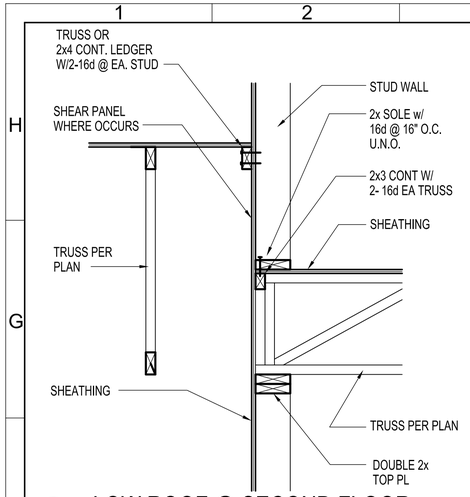

1 LOW ROOF @ SECOND FLOOR

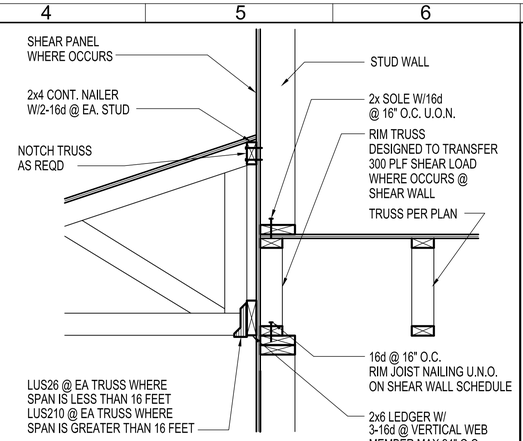

2 LOW ROOF @ SECOND FLOOR

3 NOT USED

4 NOT USED

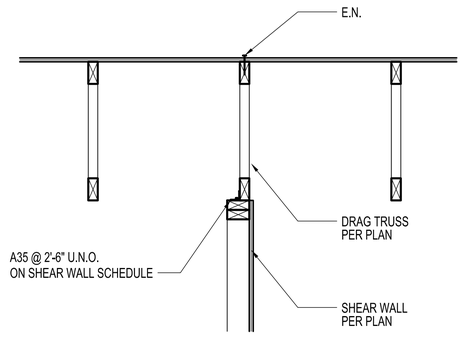

5 ROOF TRUSS DRAG CONNECTION

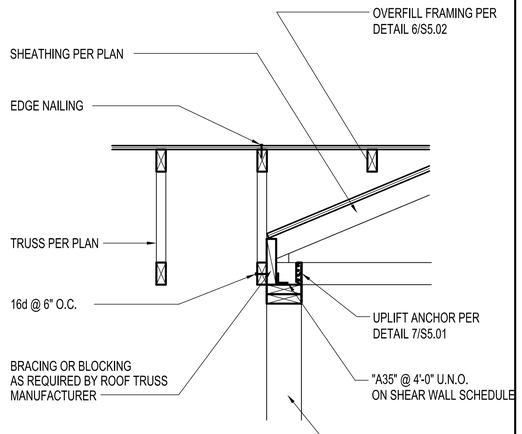

6 OVERFILL FRAMING

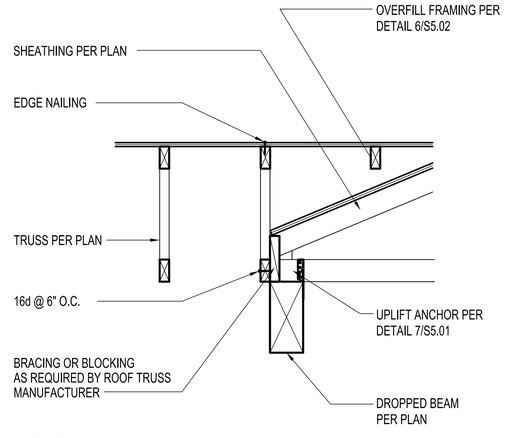

7 OVERFILL FRAMING

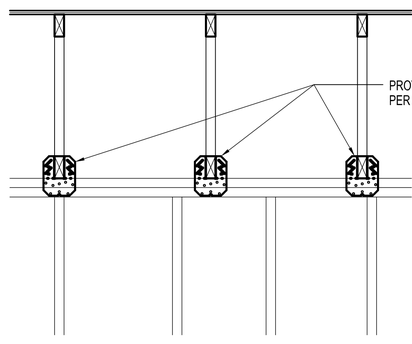

8 INTERIOR BEARING WALL

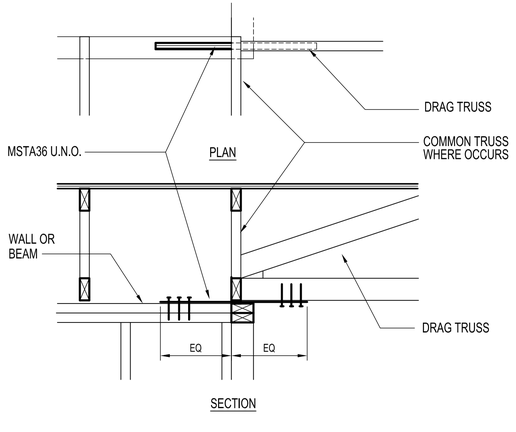

9 ROOF TRUSS DRAG CONNECTION

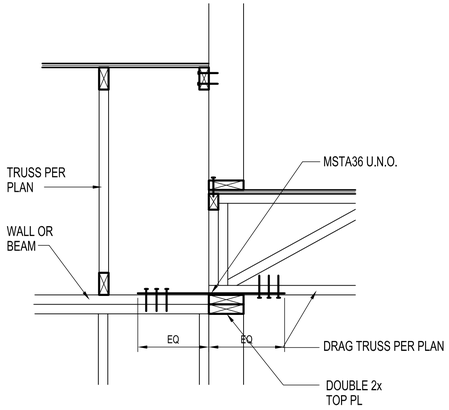

10 FLOOR TRUSS DRAG CONNECTION

11 NOT USED

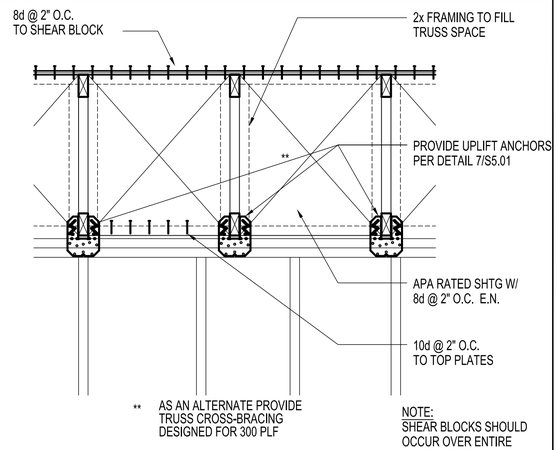

12 SHEAR BLOCK

Atlantic COMMUNITIES
Marine Corps
A Lend Lease Community

INCIDENT & injury FREE
SIN LESIÓN O ACCIDENTE
LOVE SAFE WORK SAFE
VIVA SEGURO TRABAJE SEGURO

Actus
Lend Lease

Date:	Issue:
Date:	Issue:
02-08-2011	100% SUBMITTAL

Court Street
Engineering
1008 Harrison St.
Lynchburg, Virginia 24504
(434) 846-3669 fax (434) 846-4230

NORTH CAROLINA PROFESSIONAL SEAL 037503 ENGINEER SAMUEL K. ROSKELLEY

PHASE 3
50 NEW HOMES AT KNOX LANDING
CAMP LEJEUNE NORTH CAROLINA

STRUCTURAL DETAILS

Project No:	10-003
Drawn:	RHA
Checked:	RHA
Approved:	SKR
*Scale:	NONE

*use graphic scales if sheet size varies from 22 x 34

SHEET 50 OF 72

S5.05

S:\Lejeune redebt\Knox Cove II\Structural\S5--05.dwg Feb 08, 2011 - 10:28am

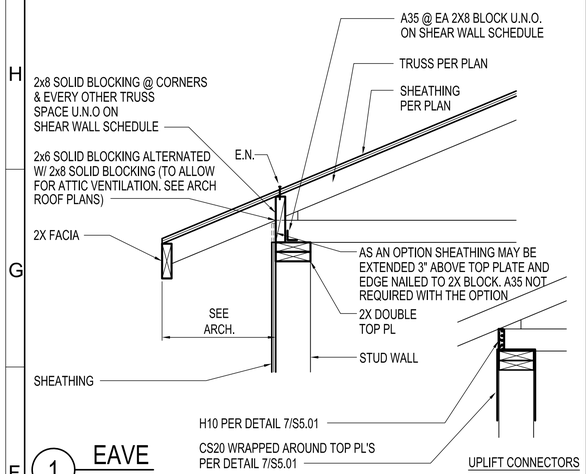

1 EAVE

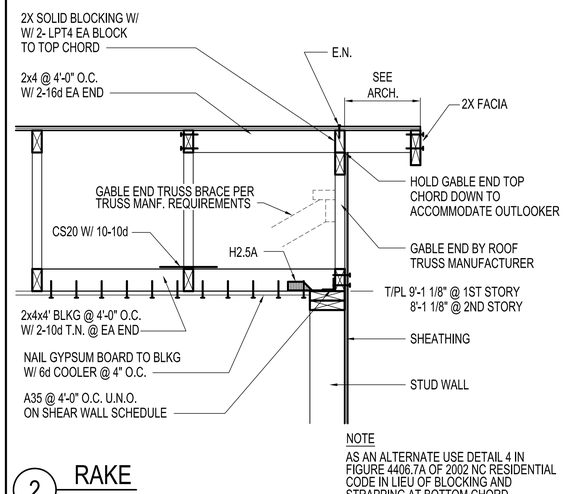

2 RAKE

NOTE
AS AN ALTERNATE USE DETAIL 4 IN FIGURE 4406.7A OF 2002 NC RESIDENTIAL CODE IN LIEU OF BLOCKING AND STRAPPING AT BOTTOM CHORD.

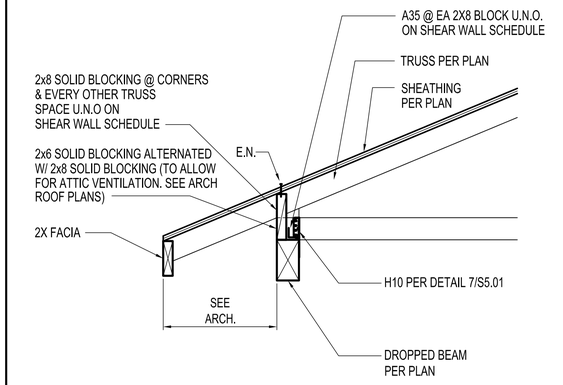

3 EAVE @ BEAM

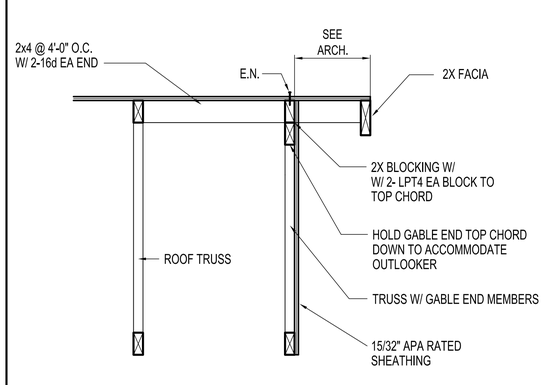

4 RAKE @ PORCH

5 NOT USED

6 NOT USED

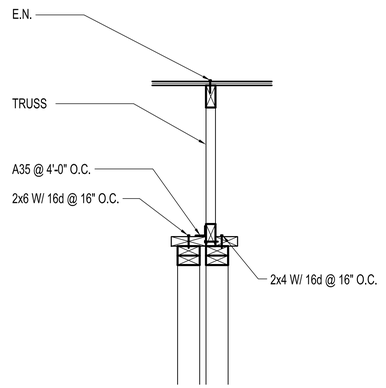

7 PARTY WALL

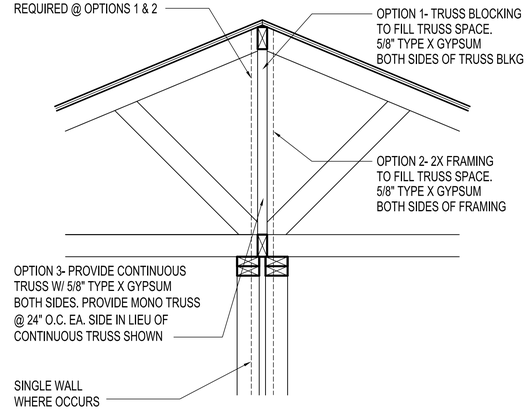

8 PARTY WALL

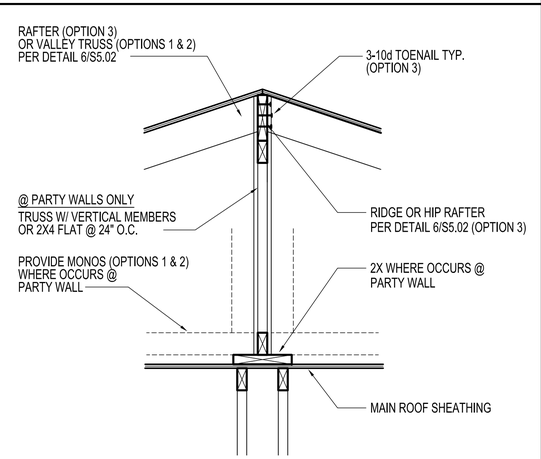

9 RIDGE @ OVERFILL FRAMING

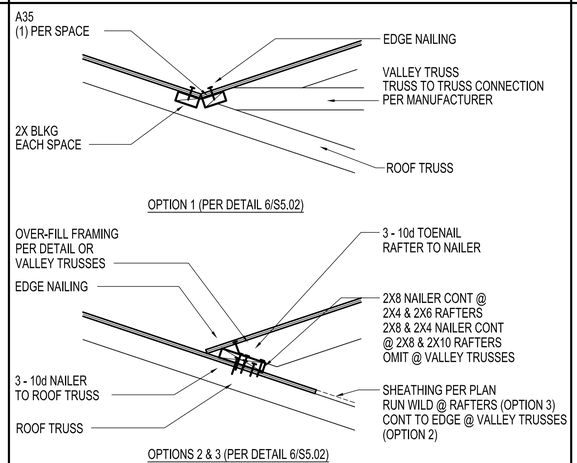

10 VALLEY

11 NOT USED

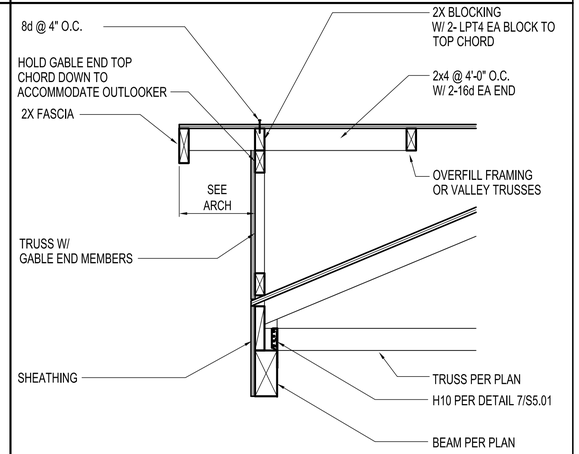

12 GABLE @ BEAM

S:\Lejeune redset\Knox Cove i\Structural\S5-06.dwg Feb 08, 2011 - 10:27am

Atlantic COMMUNITIES
Marine Corps
A Lend Lease Community

INCIDENT & INJURY FREE
SIN LESIÓN O ACCIDENTE
LIVE SAFE WORK SAFE
VIVA SEGURO TRABAJE SEGURO

Actus
Lend Lease

Date:	Issue:
Date:	Issue:

100% SUBMITTAL
02-08-2011

Court Street
Engineering
1008 Harrison St.
Lynchburg, Virginia 24504
(434) 846-3669 fax (434) 846-4230

NORTH CAROLINA PROFESSIONAL SEAL 037593 ENGINEER SAMUEL K. ROSKELLEY

PHASE 3
50 NEW HOMES AT KNOX LANDING
CAMP LEJEUNE NORTH CAROLINA

STRUCTURAL DETAILS

Project No:	10-003
Drawn:	RHA
Checked:	RHA
Approved:	SKR
*Scale:	NONE

*use graphic scales if sheet size varies from 22 x 34

SHEET 51 OF 72

S5.06

SHEAR WALL SCHEDULE

MARK	MATERIAL	EDGE NAILING	FIELD NAILING	EXT SILL (1) ANCHORAGE TO CONCRETE	ALTERNATE EXT SILL (1)(5) ANCHORAGE TO CONCRETE	INT SILL (1) ANCHORAGE	TRUSS BLK'G ANCHOR (1)(4)	RIM JOIST NAILING	SOLE PLATE NAILING	GABLE END/ ROOF DRAG TRUSS ANCHOR (1)
A	5/8" GYPSUM WALLBOARD	6d COOLER @ 7" OC	6d COOLER @ 7" OC	MASA @ 6'-0" OC	1/2"Ø TITEN HD @ 6'-0" OC	SHOTPINS @ 1'-4" OC	2-A35 @ EA BLK	16d T.N. @ 12" O.C.	16d @ 12" OC	A35 @ 2'-6" O.C.
B	15/32" APA RATED SHEATHING	8d @ 6" OC	8d @ 12" OC	MASA @ 3'-9" OC	1/2"Ø TITEN HD @ 3'-0" OC	SHOTPINS @ 10" OC	3-A35 @ EA BLK	16d T.N. @ 6" O.C.	16d @ 8" OC	A35 @ 1'-6" O.C.
C (2)	15/32" APA RATED SHEATHING	8d @ 4" OC	8d @ 12" OC	MASA @ 2'-6" OC	1/2"Ø TITEN HD @ 2'-0" OC	SHOTPINS @ 8" OC	4-A35 @ EA BLK	16d T.N. @ 4" O.C.	16d @ 6" OC	A35 @ 1'-0" O.C.
D (2) (3)	15/32" APA RATED SHEATHING	8d @ 3" OC	8d @ 12" OC	MASA @ 2'-0" OC	1/2"Ø TITEN HD @ 1'-6" OC	SHOTPINS @ 6" OC	3-A35 @ EA BLK	16d T.N. @ 3" O.C.	16d @ 4" OC	A35 @ 9" O.C.
E (2) (3)	15/32" APA RATED SHEATHING	8d @ 2" OC	8d @ 12" OC	MASA @ 1'-6" OC	1/2"Ø TITEN HD @ 1'-3" OC	SHOTPINS @ 4" OC	3-A35 @ EA BLK	A35 @ 8" O.C.	16d @ 3" OC	A35 @ 6" O.C.

NOTES:
(1) WHERE SHEAR PANELS ARE INDICATED ON BOTH FACES OF WALL, PROVIDE DOUBLE THE SILL ANCHORAGE, SOLE PLATE NAILING, RIM JOIST NAILING, GABLE END ANCHOR, OR BLOCKING NAILING SHOWN.
(2) WHERE SHEAR PANELS ARE INDICATED ON BOTH FACES OF WALL, PANEL JOINTS SHALL BE OFFSET TO FALL ON DIFFERENT FRAMING MEMBERS.
(3) FRAMING AT ADJOINING PANEL EDGES SHALL BE 3 INCH NOMINAL OR WIDER AND NAILS SHALL BE STAGGERED.
(4) PROVIDE BLOCKING EVERY OTHER TRUSS SPACE AT SHEAR WALLS A THRU D. PROVIDE BLOCKING EVERY TRUSS SPACE AT SHEAR WALLS E.
(5) 1/2"Ø TITEND HD ANCHORS EMBEDDED 3 5/8" INTO CONCRETE.

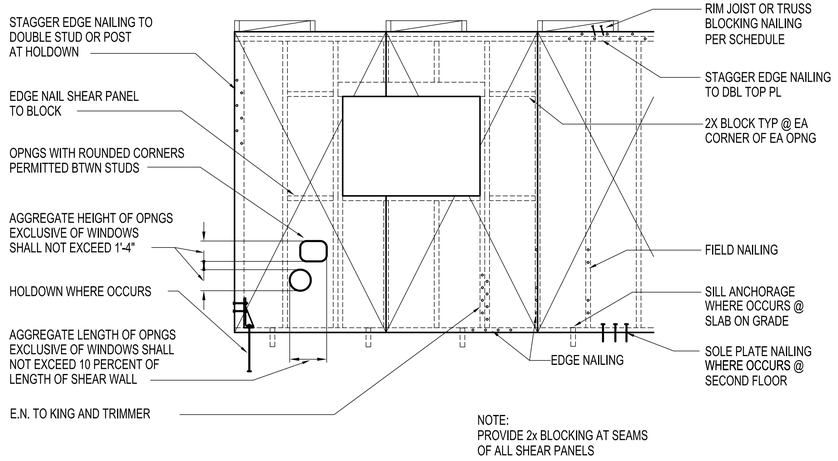

NOTE:
PROVIDE 2x BLOCKING AT SEAMS OF ALL SHEAR PANELS

1 SHEAR WALL

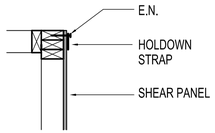

PLAN

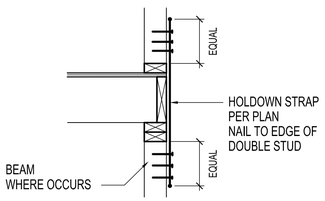

SECTION

HOLDOWN @ SECOND FLOOR

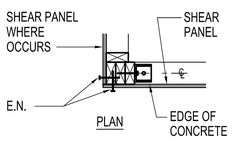

PLAN

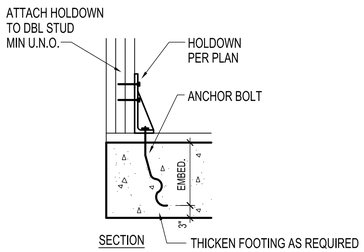

SECTION

HOLDOWN @ FOUNDATION

HOLDOWN SCHEDULE

MARK	HOLDOWN	ANCHOR BOLT	EMBEDMENT	CONNECTION TO POST	ALT. ADHESIVE ANCHOR BOLT
a	CS20	-	-	20-8d	-
b	MST37	-	-	20-16d	-
c	MST48	-	-	32-16d	-
d	MST60	-	-	46-16d	-
e	DTT2Z	1/2"Ø TITEN HD	3 5/8"	8- SDS 1/4" x 1 1/2" SCREWS	1/2"Ø THREADED ROD IN A.T. EPOXY EMBED 4 1/4"
f	HTT4	SSTB20	16 5/8"	18- SD #10 x 1 1/2" SCREWS	5/8"Ø THREADED ROD IN A.T. EPOXY EMBED 5 1/2"
g	HTT4	SSTB20	16 5/8"	18- SD #10 x 1 1/2" SCREWS	5/8"Ø THREADED ROD IN A.T. EPOXY EMBED 5 1/2"
h	HTT5	SSTB20	20 5/8"	26- 16d x 2 1/2"	5/8"Ø THREADED ROD IN A.T. EPOXY EMBED 9 3/8"
(1) j	HDU8	SSTB28	24 7/8"	20- SDS 1/4" x 3" SCREWS	7/8"Ø THREADED ROD IN A.T. EPOXY EMBED 7 3/4"
(2) k	HDU11	1"Ø AB	24"	30- SDS1/4 x 2 1/2" SCREWS	1"Ø THREADED ROD IN S.E.T. EPOXY EMBED 9"
(3) l	HDU14	1"Ø AB	24"	36- SDS1/4 x 2 1/2" SCREWS	1"Ø THREADED ROD IN S.E.T. EPOXY EMBED 15"
m	MSTC78	-	-	76- 16d SINKER	-

(1) ATTACH HOLDOWN TO 3-2x STUDS MIN.
(2) ATTACH HOLDOWN TO 4x6 POST MIN.
(3) ATTACH HOLDOWN TO 6x6 POST MIN.

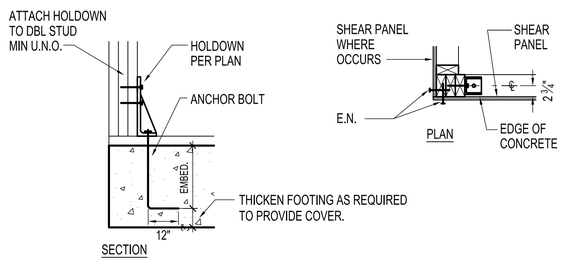

SECTION

HOLDOWN TYPE k AND l @ FOUNDATION

PLAN

2 HOLDOWN

3 NOT USED

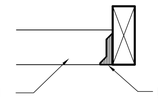

HANGER SCHEDULE

BEAM SIZE CONNECTION	HANGER
2-2x8	HU26-2
2-2x10	HHUS210-2
2-2x12	HU212-2
2-1 3/4" x 7 1/4" LVL	HGUS48
2-1 3/4" x 9 1/4" LVL	HGUS410
2-1 3/4" x 11 1/4" LVL	HGUS410
2-1 3/4" x 14" LVL	HGUS414
2-1 3/4" x 16" LVL	HGUS414

4 BEAM TO BEAM CONNECTION

UNLESS NOTED OTHERWISE ON THE PLANS

FASTENER SCHEDULE FOR STRUCTURAL MEMBERS

STRUCTURAL ELEMENT	NUMBER & TYPE OF FASTENER	SPACING OF FASTENER
JOIST TO SILL OR GIRDER, TOE NAIL	3-8d	-
SOLE PLATE TO JOIST OR BLOCKING, FACE NAIL	16d	16" O.C.
TOP OR SOLE PLATE TO STUD, END NAIL	2-16d	-
STUD TO SOLE PLATE, TOE NAIL	3-8d or 2-16d	-
DOUBLE STUDS FACE NAIL	10d	24" O.C.
DOUBLE TOP PLATES, FACE NAIL	10d	24" O.C.
DOUBLE TOP PLATES, MIN. 48" OFFSET OF END JOIST, FACE NAIL IN LAPPED AREA	8-16d	-
BLOCKING BETWEEN JOISTS OR RAFTERS TO TOP PLATE, TOE NAIL	3-8d	-
RIM JOIST TO TOP PLATE, TOE NAIL	8d	6" O.C.
TOP PLATES, LAPS AT CORNERS AND INTERSECTIONS, FACE NAIL	2-10d	-
BUILT UP HEADER, TWO PIECES WITH 1/2" SPACER	16d	16" O.C.
ROOF TRUSS TO PLATE, TOE NAIL	2-16d	-
BUILT-UP CORNER STUDS	10d	24" O.C.
BUILT-UP GIRDERS & BEAMS, 2" LUMBER LAYERS	10d	32" O.C. @ TOP & BOTTOM & STAGGERED. 2 NAILS @ ENDS AND @ EACH SPLICE

5 FASTENER SCHEDULE

Atlantic COMMUNITIES
Marine Corps
A Lend Lease Community

INCIDENT & INJURY FREE
SIN LESIÓN O ACCIDENTE
LIVE SAFE WORK SAFE
VIVA SEGURO TRABAJE SEGURO

Actus
Lend Lease

Date:	Issue:

PLUMBING SYMBOLS

- TOP CONNECTION, 45° OR 90°
- BOTTOM CONNECTION, 45° OR 90°
- SIDE CONNECTION
- RISE OR DROP IN PIPE
- PIPE UP
- PIPE DOWN
- FLOOR DRAIN
- TRAP
- C.O. CLEAN OUT
- HOSE BIB
- SHUT-OFF VALVE

ABBREVIATIONS

C.O.	CLEANOUT
CW	DOMESTIC COLD WATER
DN	DOWN
DWG	DRAWING
EWH	ELECTRIC WATER HEATER
FD	FLOOR DRAIN
HB	HOSE BIBB
HW	DOMESTIC HOT WATER
NTS	NOT TO SCALE
PVC	POLYVINYL CHLORIDE PIPE
SAN	SANITARY WASTE PIPE
UP	UP
V	VENT PIPE
VTR	VENT THROUGH ROOF

GENERAL NOTES

1. ALL WORK SHALL BE COMPLETED IN ACCORDANCE WITH THE 2006 IPC, INCLUDING NC AMENDMENTS, AND ALL APPLICABLE NORTH CAROLINA CODES AND REGULATIONS.

2. PLUMBING WORK IS INDICATED DIAGRAMMATICALLY. EXACT LOCATIONS OF ALL COMPONENTS ARE TO BE VERIFIED AND COORDINATED IN THE FIELD AND WITH THE OTHER DISCIPLINES. FIELD MODIFICATIONS SUCH AS OFFSETS IN PIPING REQUIRED FOR PROPER INSTALLATION, MAINTENANCE CLEARANCE, DUE TO OBSTRUCTIONS OR INTERFERENCES SHALL BE PROVIDED AT NO EXTRA COST.

3. COORDINATE ALL INSTALLATIONS WITH THE OTHER TRADES, PRIOR TO COMMENCING ANY INSTALLATIONS. NO EXTRA PAYMENTS WILL BE PROVIDED FOR WORK THAT HAS TO BE REDONE BECAUSE OF LACK OF COORDINATION.

4. COORDINATE PIPING WITH ALL ELECTRICAL EQUIPMENT PRIOR TO ANY INSTALLATION. DO NOT INSTALL ANY PIPING OVER ANY ELECTRICAL PANELS. ANY PIPING FOUND TO BE INSTALLED OVER ELECTRICAL PANELS SHALL BE REROUTED AT NO EXTRA COST TO THE OWNER.

5. PROVIDE SEPARATION IN TRENCHES PER N.C. 2006 PLUMBING CODE.

6. REFER TO ARCHITECTURAL DRAWINGS FOR EXACT LOCATIONS AND MOUNTING HEIGHTS OF PLUMBING FIXTURES.

7. ALL PIPING SHALL BE INDEPENDENTLY SUPPORTED FROM STRUCTURE.

8. INSTALL ALL EQUIPMENT PER EQUIPMENT MANUFACTURER'S RECOMMENDATIONS AND REQUIREMENTS.

9. ALL PIPING SHALL BE INSTALLED PARALLEL TO WALLS AND FLOORS, UNLESS SLOPING IS REQUIRED IN DRAIN AND VENT PIPING AND BY CODE.

10. PROVIDE FIRE STOPPING AT ALL PIPING PENETRATIONS THROUGH 2ND LEVEL FLOOR AND CEILING.

11. PROVIDE ALL OFFSETS AND FITTINGS AS REQUIRED.

12. MAKE CONNECTIONS TO UTILITIES.

13. CONCEAL PIPING ABOVE CEILINGS, WITHIN WALLS OR CHASES, UNLESS SPECIFICALLY NOTED.

14. PLUMBING ROOF PENETRATIONS SHALL BE NEOPRENE TYPE.

15. PROVIDE FOUNDATION PENETRATION SLEEVES. ALLOW MINIMUM 1/2" CLEARANCE BETWEEN SLEEVE AND PIPE.

16. ALL EXPOSED PIPING AND FITTINGS IN FINISHED AREAS SHALL BE CHROME PLATED WITH ESCUTCHEONS.

17. INSULATE ALL COLD WATER PIPING AND PROVIDE COMPLETE VAPOR PROOF COVER AND JOINT SEALS.

18. MOUNT HOSE BIBBS 24" ABOVE FINISHED GRADE.

19. REFER TO SPECIFICATIONS FOR ADDITIONAL REQUIREMENTS FOR MATERIALS AND EQUIPMENT INSTALLATION STANDARDS.

Atlantic COMMUNITIES Marine Corps A Lend Lease Community

INCIDENT & INJURY FREE
SIN LESIÓN O ACCIDENTE
LIVE SAFE WORK SAFE
VIVA SEGURO TRABAJE SEGURO

Actus Lend Lease

Date:	Issue:	Date:	Issue:

100% SUBMITTAL 02-08-2011

PERRIN ENGINEERING
A DIVISION OF CYP CONSULTING, INC.
MECHANICAL AND PLUMBING
77 DOWNEY ST.
HOPKINTON,MA 01748
P: 508-497 5033
F: 774-759-3084

COMMONWEALTH OF MASSACHUSETTS
CHRISTIANE Y. PERRIN
MECHANICAL
No. 36015
REGISTERED PROFESSIONAL ENGINEER

PHASE 3
50 NEW HOMES AT KNOX LANDING
CAMP LEJEUNE NORTH CAROLINA

PLUMBING LEGEND AND NOTES

Project No:	10-003
Drawn:	CP
Checked:	CP
Approved:	CP
*Scale:	1/4"=1'-0"

*use graphic scales if sheet size varies from 22 x 34

SHEET 53 OF 72

P0.01

TAG	DESCRIPTION
(A)	WATER CLOSET
(B)	WATER CLOSET, ADA
(C)	INTEGRAL LAVATORY
(D)	PEDESTAL LAVATORY
(E)	BATHTUB/SHOWER UNIT
(F)	BATHTUB/SHOWER UNIT, ADA
(G)	ROLL-IN SHOWER UNIT, ADA
(H)	SHOWER CONTROLS
(I)	KITCHEN SINK AND DISHWASHER
(J)	LAUNDRY TUB
(K)	ICE-MAKER CONNECTION BOX
(L)	WASHING MACHINE CONNECTION BOX
(M)	HOSE BIBB
(N)	FLOOR DRAIN
(O)	TRAP PRIMER
(P)	BACKFLOW PREVENTER

NOTES:

1. INSTALL WATER PIPING PLUMB TO WALLS, FLOORS, AND CEILING, INSTALL SANITARY WASTE AND VENT SLOPED AS REQUIRED BY CODE.

2. USE PEX TUBING FOR BELOW SLAB 1" INCOMING WATER. NO JOINTS PERMITTED UNDER THE SLAB.

3. PROVIDE WATER HAMMER ARRESTORS AT DISHWASHER AND WASHING MACHINE CONNECTIONS.

4. REFER TO RISER DIAGRAMS ON DRWG P2.01 AND TO PLUMBING SCHEDULES AND DETAILS ON DRWG P5.01 FOR ADDITIONAL INFORMATION

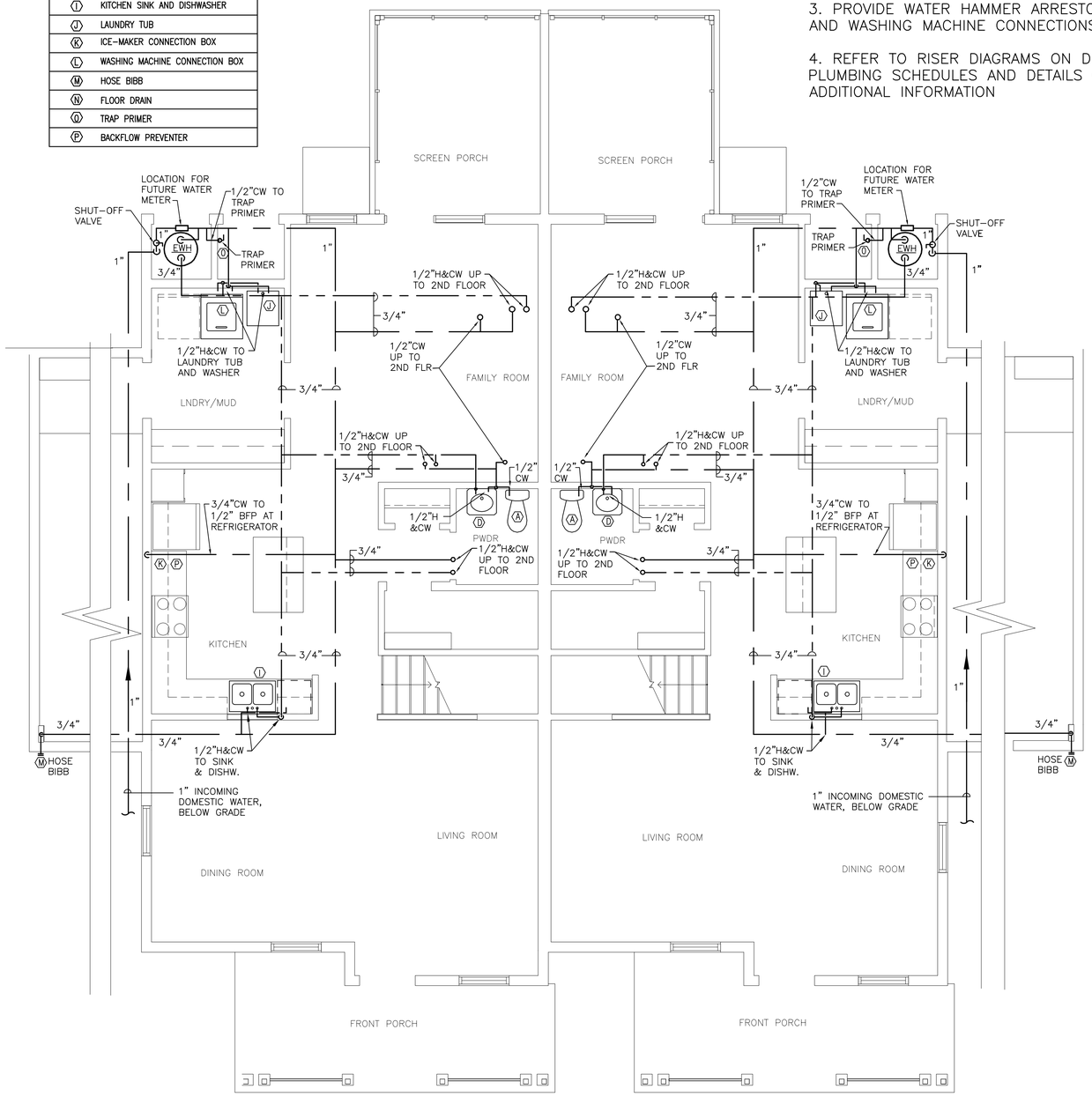

BUILDING TYPE 401 – LOWER LEVEL HOT AND COLD WATER FLOOR PLAN

SCALE: 1/4"=1'-0"

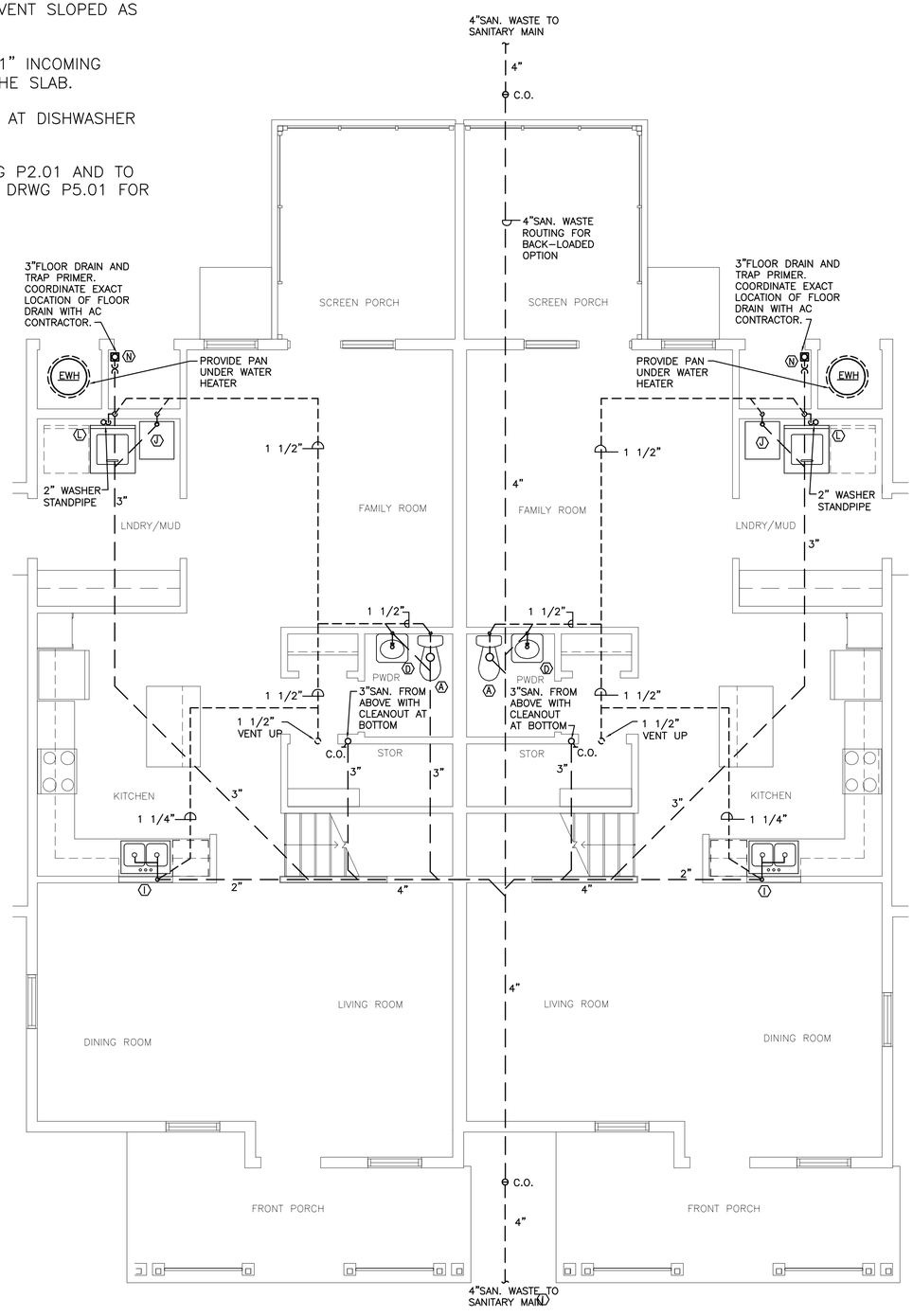

BUILDING TYPE 401 – LOWER LEVEL SANITARY WASTE & VENT FLOOR PLAN

SCALE: 1/4"=1'-0"

Atlantic COMMUNITIES Marine Corps — A Lend Lease Community

INCIDENT & INJURY FREE
SIN LESIÓN O ACCIDENTE

LIVE SAFE WORK SAFE — VIVA SEGURO TRABAJE SEGURO

Actus Lend Lease

Issue:	Date:

NOTES:

1. INSTALL WATER PIPING PLUMB TO WALLS, FLOORS, AND CEILING, INSTALL SANITARY WASTE AND VENT SLOPED AS REQUIRED BY CODE.

2. USE PEX TUBING FOR BELOW SLAB 1" INCOMING WATER. NO JOINTS PERMITTED UNDER THE SLAB.

3. PROVIDE WATER HAMMER ARRESTORS AT DISHWASHER AND WASHING MACHINE CONNECTIONS.

4. REFER TO RISER DIAGRAMS ON DRWG P2.01 AND TO PLUMBING SCHEDULES AND DETAILS ON DRWG P5.01 FOR ADDITIONAL INFORMATION

TAG	DESCRIPTION
A	WATER CLOSET
B	WATER CLOSET, ADA
C	INTEGRAL LAVATORY
D	PEDESTAL LAVATORY
E	BATHTUB/SHOWER UNIT
F	BATHTUB/SHOWER UNIT, ADA
G	ROLL-IN SHOWER UNIT, ADA
H	SHOWER CONTROLS
I	KITCHEN SINK AND DISHWASHER
J	LAUNDRY TUB
K	ICE-MAKER CONNECTION BOX
L	WASHING MACHINE CONNECTION BOX
M	HOSE BIBB
N	FLOOR DRAIN
O	TRAP PRIMER
P	BACKFLOW PREVENTER

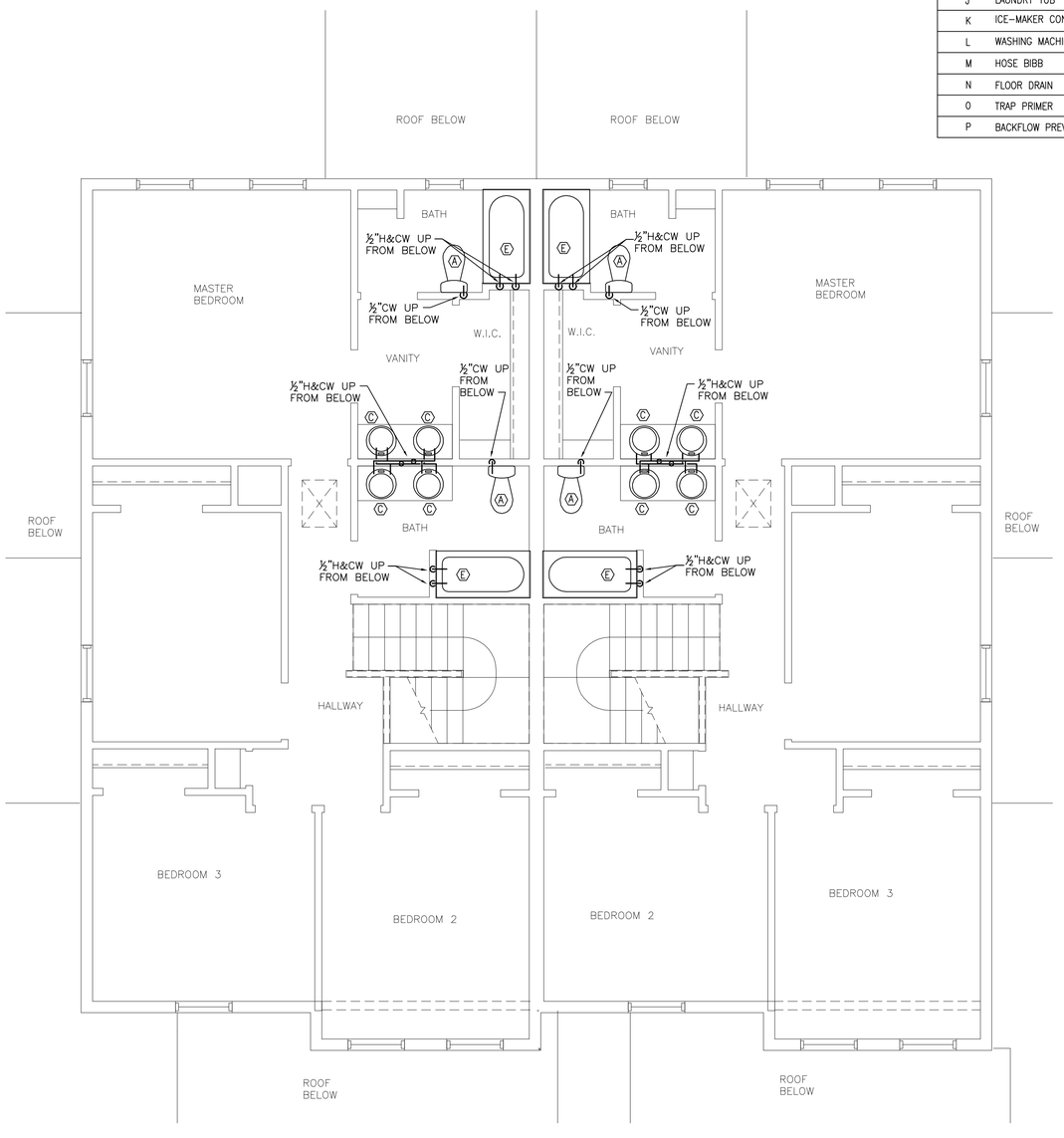

BUILDING TYPE 401 – UPPER LEVEL HOT AND COLD WATER FLOOR PLAN

SCALE: 1/4"=1'-0"

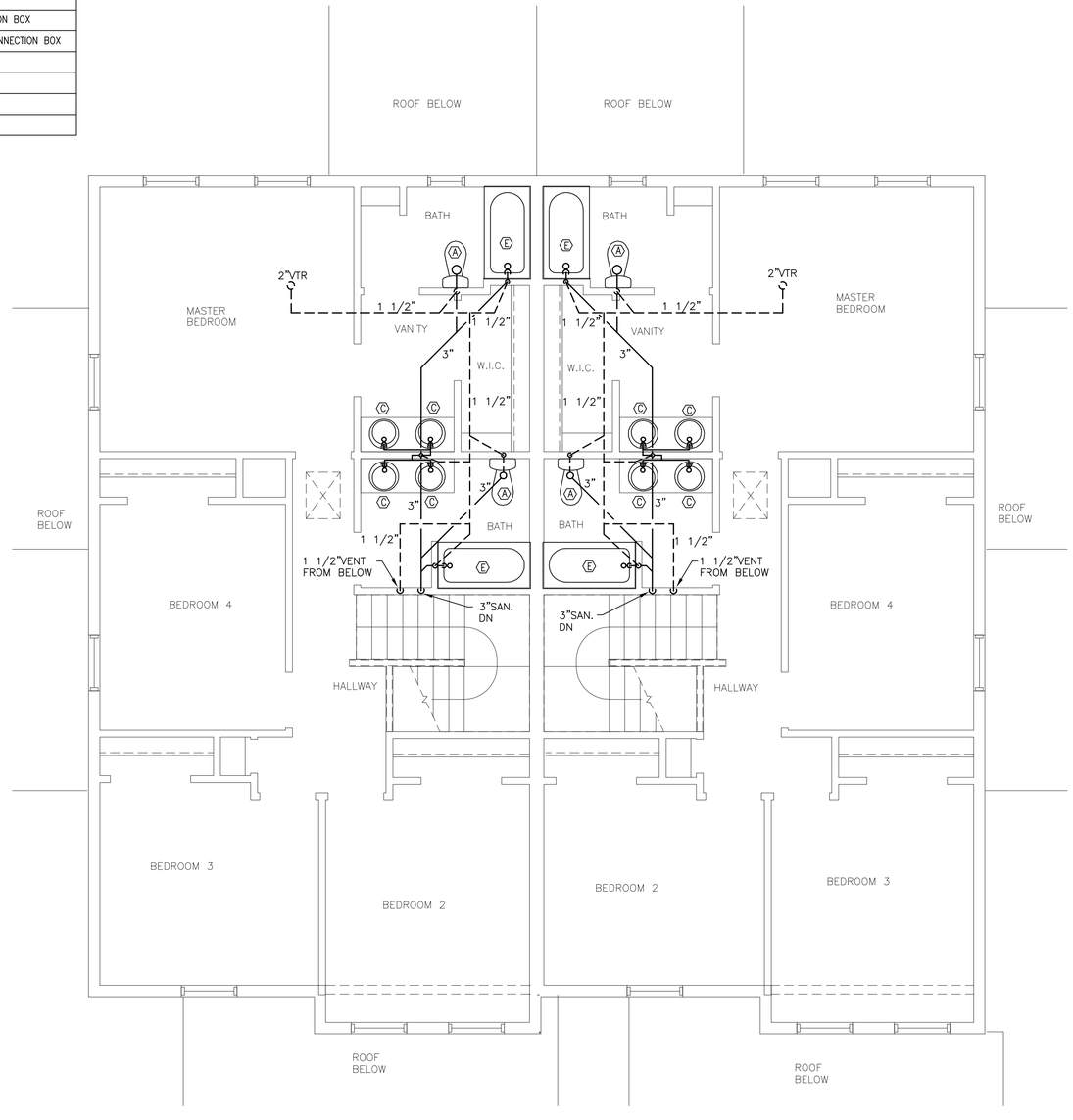

BUILDING TYPE 401 – UPPER LEVEL SANITARY WASTE & VENT FLOOR PLAN

SCALE: 1/4"=1'-0"

Atlantic COMMUNITIES
Marine Corps
A Lend Lease Community

INCIDENT & INJURY FREE
SIN LESIÓN O ACCIDENTE

LIVE SAFE WORK SAFE
VIVA SEGURO TRABAJE SEGURO

Actus
Lend Lease

Issue:	Date:

NOTES:

1. INSTALL WATER PIPING PLUMB TO WALLS, FLOORS, AND CEILING, INSTALL SANITARY WASTE AND VENT SLOPED AS REQUIRED BY CODE.

2. USE PEX TUBING FOR BELOW SLAB 1" INCOMING WATER. NO JOINTS PERMITTED UNDER THE SLAB.

3. PROVIDE WATER HAMMER ARRESTORS AT DISHWASHER AND WASHING MACHINE CONNECTIONS.

4. REFER TO RISER DIAGRAMS ON DRWG P2.05 AND TO PLUMBING SCHEDULES AND DETAILS ON DRWG P5.01 FOR ADDITIONAL INFORMATION

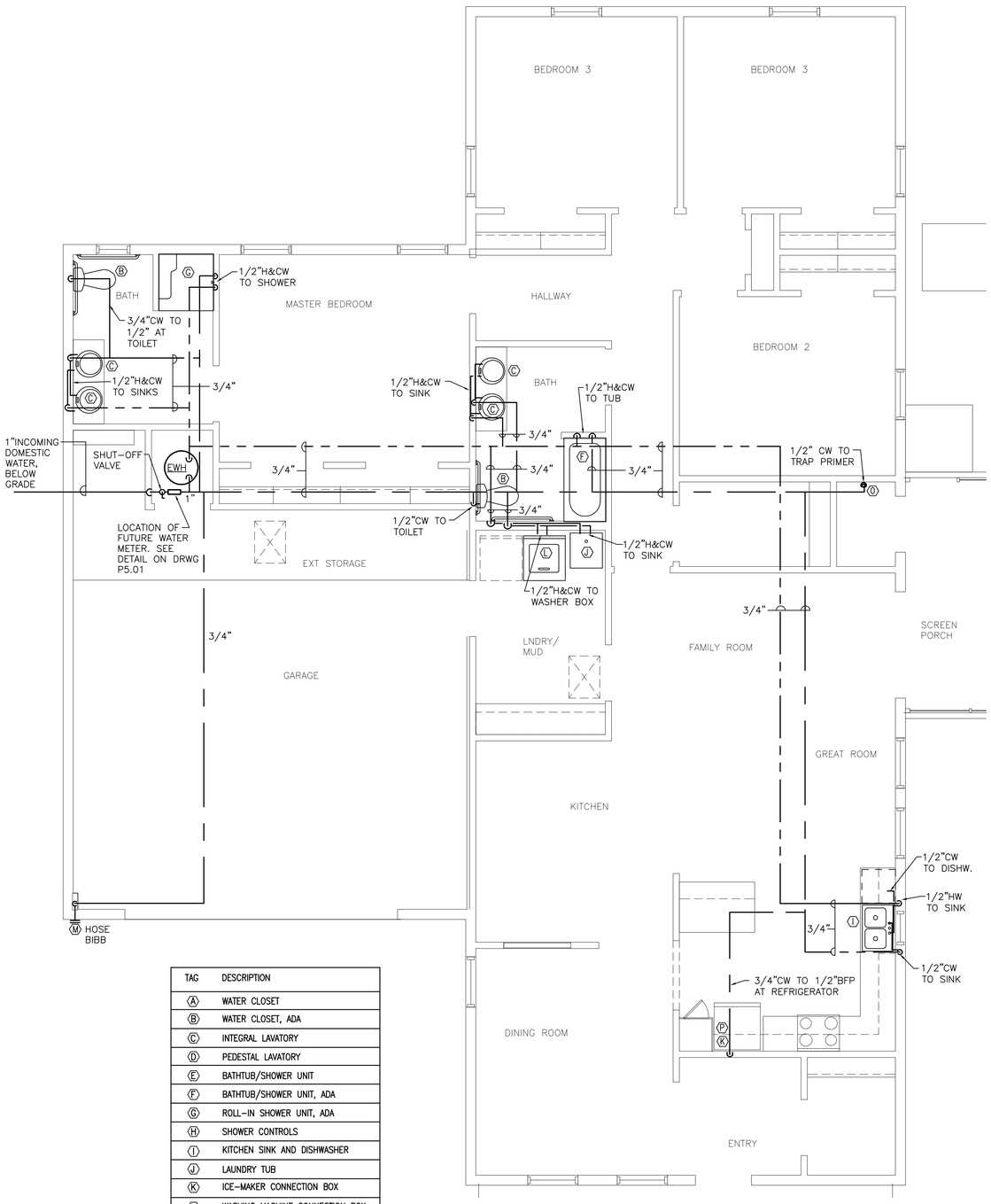

TAG	DESCRIPTION
A	WATER CLOSET
B	WATER CLOSET, ADA
C	INTEGRAL LAVATORY
D	PEDESTAL LAVATORY
E	BATHTUB/SHOWER UNIT
F	BATHTUB/SHOWER UNIT, ADA
G	ROLL-IN SHOWER UNIT, ADA
H	SHOWER CONTROLS
I	KITCHEN SINK AND DISHWASHER
J	LAUNDRY TUB
K	ICE-MAKER CONNECTION BOX
L	WASHING MACHINE CONNECTION BOX
M	HOSE BIBB
N	FLOOR DRAIN
O	TRAP PRIMER
P	BACKFLOW PREVENTER

BUILDING TYPE 402 – HOT AND COLD WATER FLOOR PLAN

SCALE: 1/4"=1'-0"

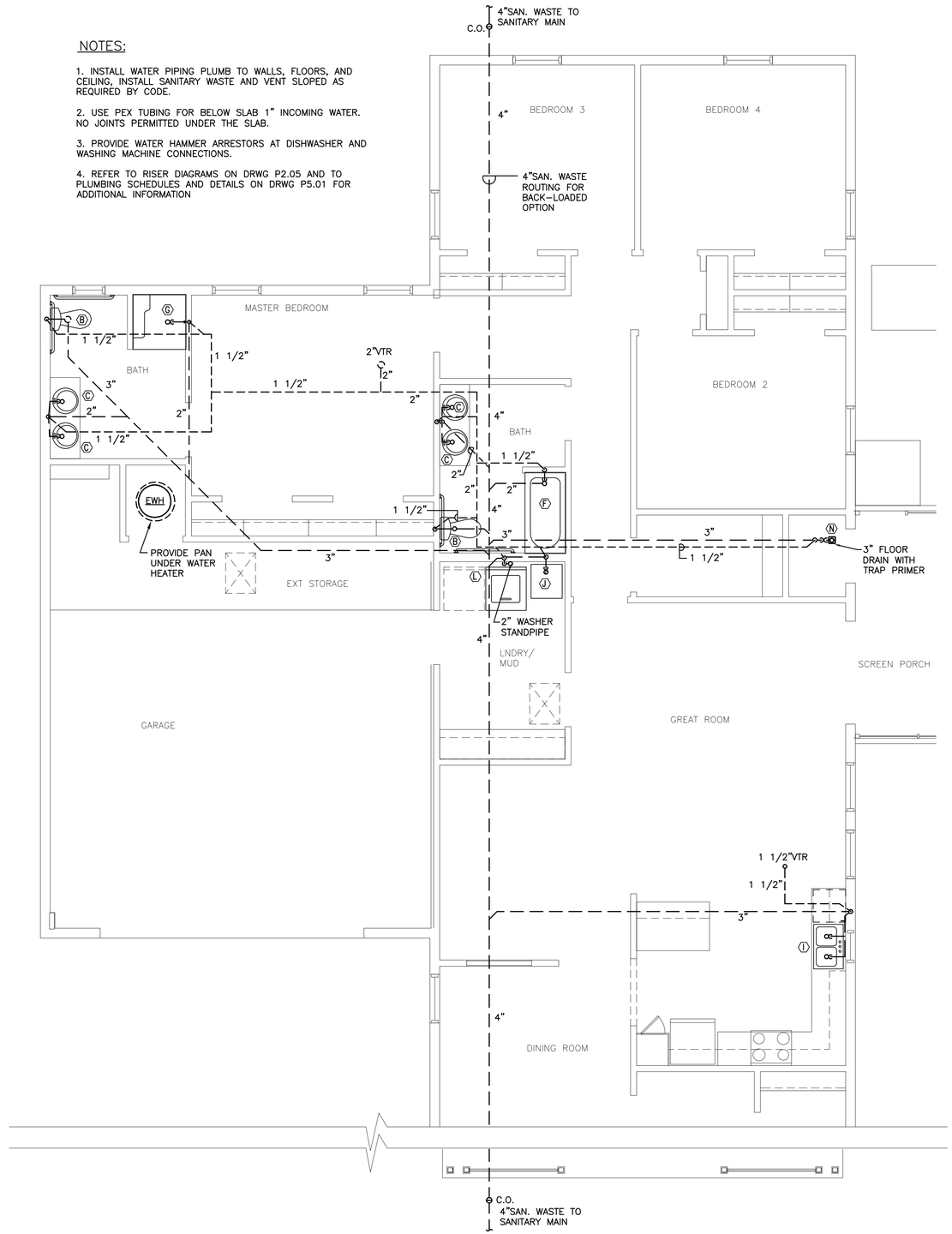

BUILDING TYPE 402 – SANITARY WASTE & VENT FLOOR PLAN

SCALE: 1/4"=1'-0"

Atlantic COMMUNITIES Marine Corps

INCIDENT & INJURY FREE
SIN LESIÓN O ACCIDENTE

Actus Lend Lease

Date:	Issue:	Date:	Issue:

100% SUBMITTAL 02-08-2011

PERRIN ENGINEERING
A DIVISION OF CYP CONSULTING, INC.
MECHANICAL AND PLUMBING
77 DOWNEY ST. P: 508-497 5033
HOPKINTON,MA 01748 F: 774-759-3084

PHASE 3
50 NEW HOMES AT KNOX LANDING
CAMP LEJEUNE NORTH CAROLINA

BUILDING TYPE 402 PLUMBING FLOOR PLANS

Project No: 10-003
Drawn:
Checked:
Approved:
*Scale:
*use graphic scales if sheet size varies from 22 x 34

SHEET 56 OF 72

P1.03

TAG	DESCRIPTION
Ⓐ	WATER CLOSET
Ⓑ	WATER CLOSET, ADA
Ⓒ	INTEGRAL LAVATORY
Ⓓ	PEDESTAL LAVATORY
Ⓔ	BATHTUB/SHOWER UNIT
Ⓕ	BATHTUB/SHOWER UNIT, ADA
Ⓖ	ROLL-IN SHOWER UNIT, ADA
Ⓗ	SHOWER CONTROLS
Ⓘ	KITCHEN SINK AND DISHWASHER
Ⓙ	LAUNDRY TUB
Ⓚ	ICE-MAKER CONNECTION BOX
Ⓛ	WASHING MACHINE CONNECTION BOX
Ⓜ	HOSE BIBB
Ⓝ	FLOOR DRAIN
Ⓞ	TRAP PRIMER
Ⓟ	BACKFLOW PREVENTER

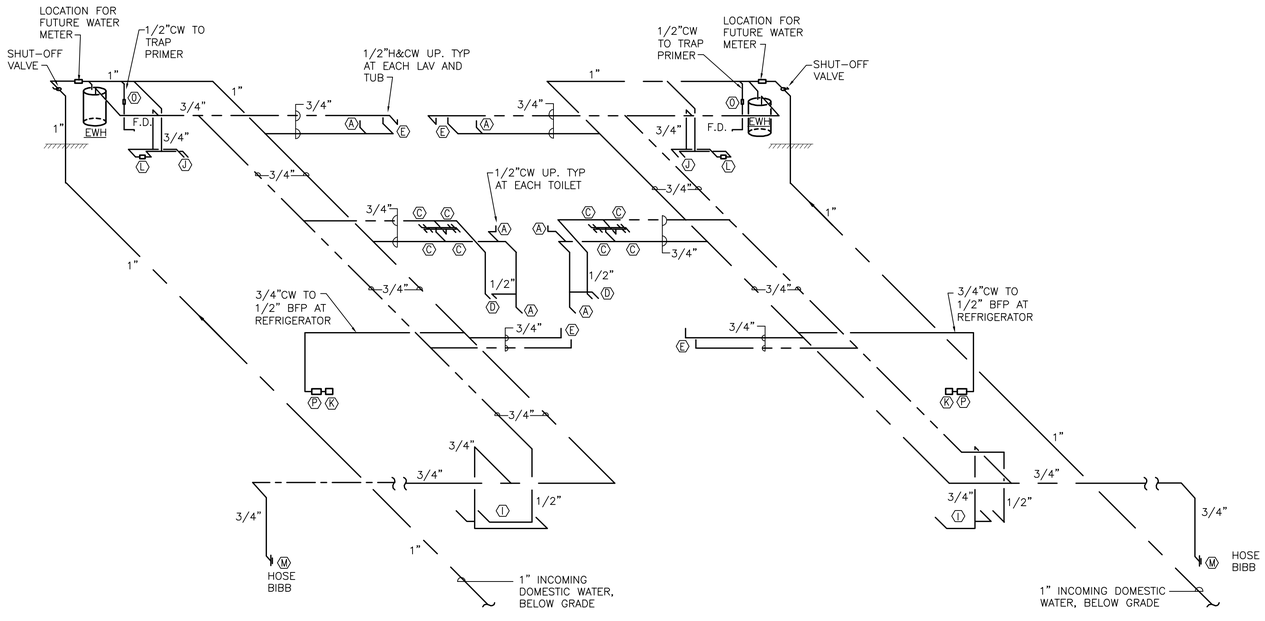

BUILDING TYPE 401 – WATER RISER DIAGRAM

NTS

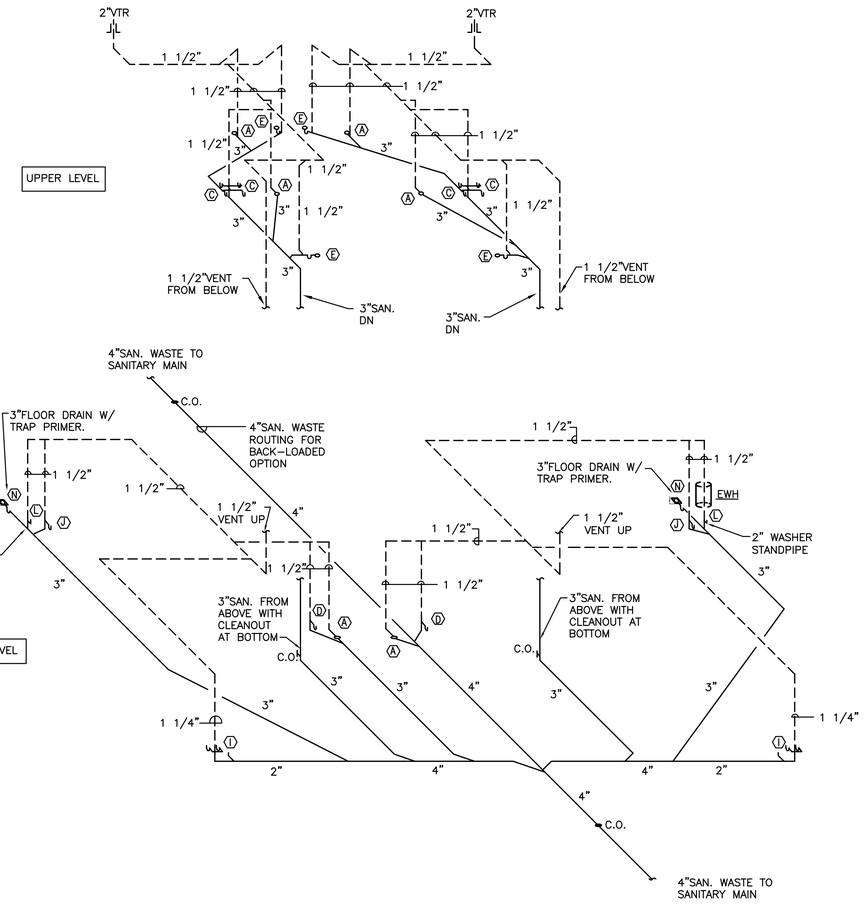

BUILDING TYPE 401 – SANITARY WASTE AND VENT RISER DIAGRAMS

NTS

Atlantic COMMUNITIES
Marine Corps
A Lend Lease Company

INCIDENT & INJURY FREE
SIN LESIÓN O ACCIDENTE

LIVE SAFE WORK SAFE
VIVA SEGURO TRABAJE SEGURO

Actus
Lend Lease

	Issue:	Date:

TAG	DESCRIPTION
Ⓐ	WATER CLOSET
Ⓑ	WATER CLOSET, ADA
Ⓒ	INTEGRAL LAVATORY
Ⓓ	PEDESTAL LAVATORY
Ⓔ	BATHTUB/SHOWER UNIT
Ⓕ	BATHTUB/SHOWER UNIT, ADA
Ⓖ	ROLL-IN SHOWER UNIT, ADA
Ⓗ	SHOWER CONTROLS
Ⓘ	KITCHEN SINK AND DISHWASHER
Ⓙ	LAUNDRY TUB
Ⓚ	ICE-MAKER CONNECTION BOX
Ⓛ	WASHING MACHINE CONNECTION BOX
Ⓜ	HOSE BIBB
Ⓝ	FLOOR DRAIN
Ⓞ	TRAP PRIMER
Ⓟ	BACKFLOW PREVENTER

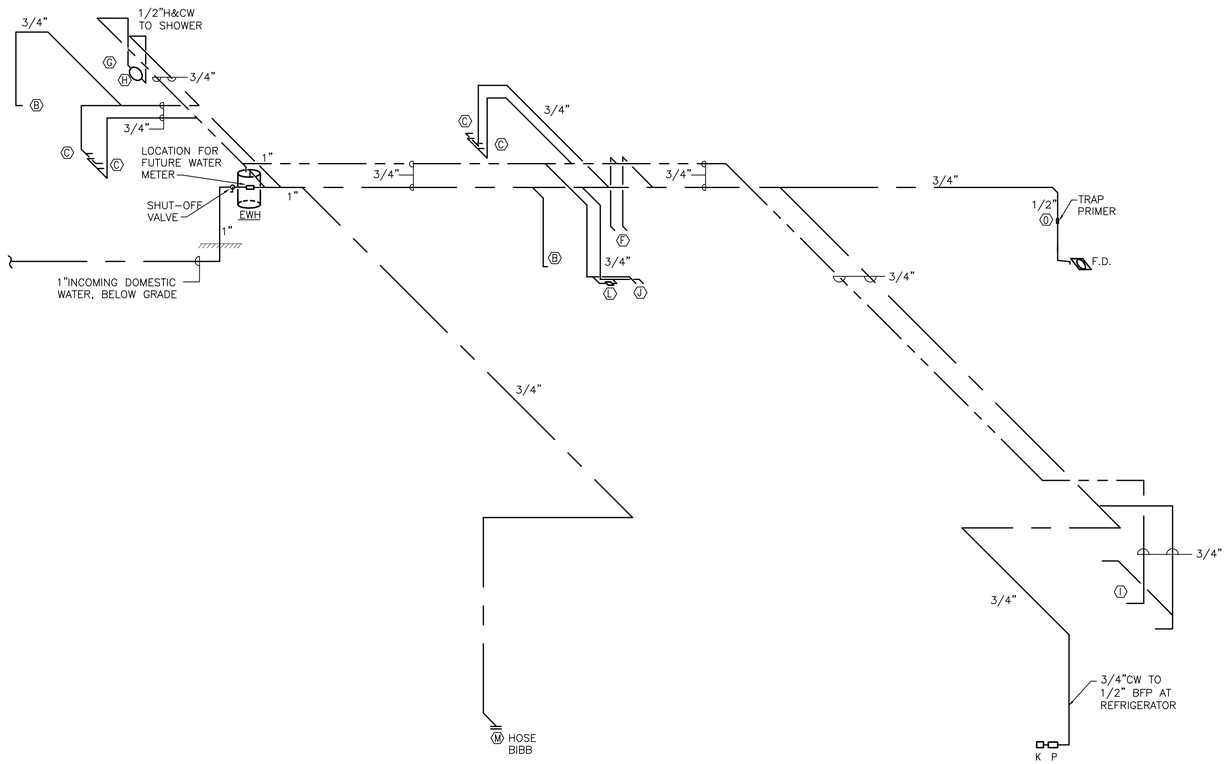

BUILDING TYPE 402 – WATER RISER DIAGRAM

NTS

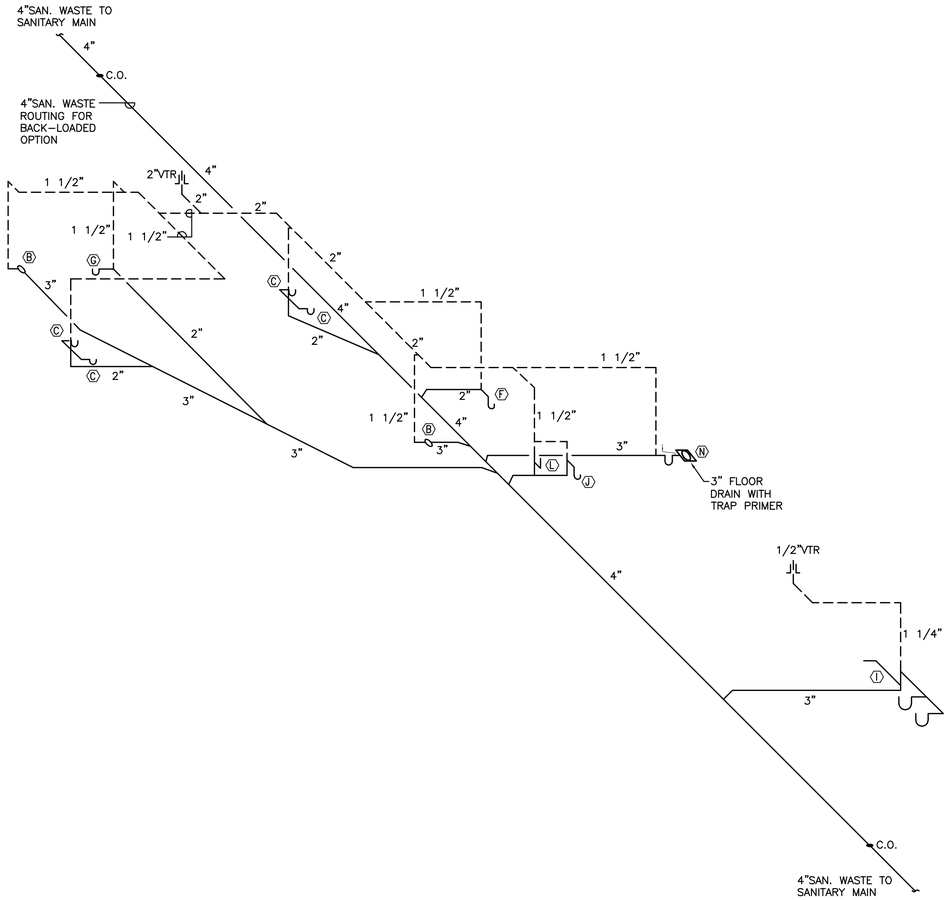

BUILDING TYPE 402 – SANITARY WASTE AND VENT RISER DIAGRAMS

NTS

Atlantic COMMUNITIES
Marine Corps
A Lend Lease Community

INCIDENT & INJURY FREE
SIN LESIÓN O ACCIDENTE

LIVE SAFE WORK SAFE
VIVA SEGURO TRABAJE SEGURO

Actus
Lend Lease

	Issue:	Date:

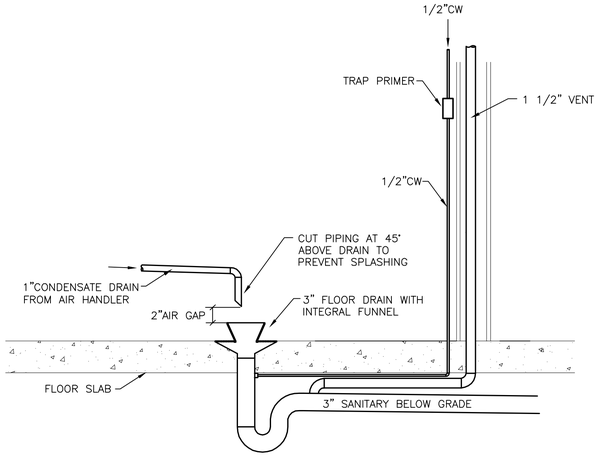

FLOOR DRAIN DETAIL

1

NO SCALE

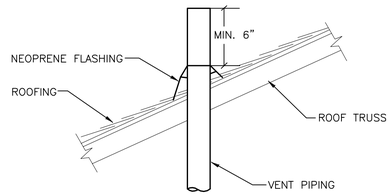

PLUMBING VENT THRU ROOF

2

NO SCALE

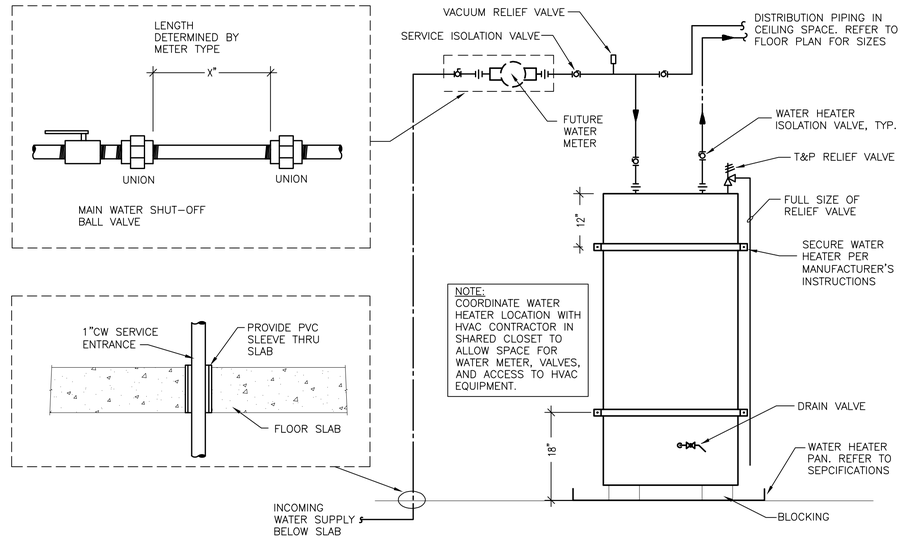

ELECTRIC WATER HEATER

3

NO SCALE

ELECTRICAL WATER HEATER SCHEDULE

TAG	LOCATION	TANK CAP. GALLONS	RECOVERY GPH	ELECTRICAL kW	ELECTRICAL V/Ph/Hz	COMMENTS	MANUFAFTURER MODEL NUMBER
EWH-1	MECHANICAL CLOSET	50	20.5@90°F	2@ 4.5	240/3/60	SEE NOTES 1, 2	AO SMITH, PXHT OR APPROVED EQUEAL
EWH-2	MECHANICAL CLOSET	60	20.5@90°F	2@ 4.5	240/3/60	SEE NOTES 1, 2, 3	AO SMITH, PXHT OR APPROVED EQUEAL

NOTES:
1. PROVIDE WITH 26"ø DRAIN PAN W/ 1" PVC FITTING AND MINIMUM 1 ½" RIM.
2. REFER TO SPECIFICATIONS FOR ADDITIONAL REQUIREMENTS.
3. PROVIDE IN 4-BEDROOM UNITS

PLUMBING FIXTURE SCHEDULE

TAG	DESCRIPTION	WASTE SIZE	VENT SIZE	WATER CONNECTION C.W.	WATER CONNECTION H.W.	ACCESSORIES/COMMENTS
Ⓐ	WATER CLOSET	3"	2"	1/2"	--	
Ⓑ	WATER CLOSET, ADA	3"	2"	1/2"	--	
Ⓒ	INTEGRAL LAVATORY	2"	1 1/2"	1/2"	1/2"	
Ⓓ	PEDESTAL LAVATORY	2"	1 1/2"	1/2"	1/2"	
Ⓔ	BATHTUB/SHOWER UNIT	2"	1 1/2"	1/2"	1/2"	
Ⓕ	BATHTUB/SHOWER UNIT, ADA	2"	1 1/2"	1/2"	1/2"	
Ⓖ	ROLL-IN SHOWER UNIT, ADA	2"	1 1/2"	1/2"	1/2"	
Ⓗ	SHOWER CONTROLS	--	--	1/2"	1/2"	
Ⓘ	KITCHEN SINK	2"	1 1/2"	1/2"	1/2"	
Ⓙ	LAUNDRY TUB	2"	1 1/2"	1/2"	1/2"	
Ⓚ	ICE-MAKER CONNECTION BOX	--	--	1/2"	--	PROVIDE WITH WATER HAMMER ARRESTOR AND BACKFLOW PREVENTOR
Ⓛ	WASHING MACHINE CONNECTION BOX	2"	1 1/2"	1/2"	1/2"	PROVIDE WITH WATER HAMMER ARRESTOR
Ⓜ	HOSE BIBB	--"	--	1/2"	--	
Ⓝ	FLOOR DRAIN	2"	1 1/2"	--	--	PROVIDE WITH TRAP PRIMER
Ⓞ	TRAP PRIMER	--	--	1/2"	--	PROVIDE WITH TRAP PRIMER

NOTE:
1. REFER TO SPECIFICATIONS FOR ADDITIONAL INFORMATION AND DETAILS ON PLUMBING EQUIPMENT

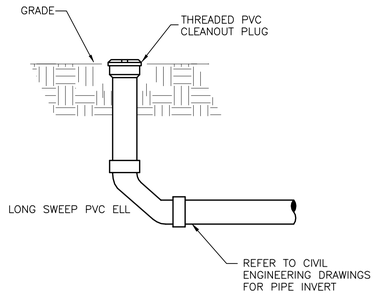

EXTERIOR 1-WAY CLEANOUT

4

NO SCALE

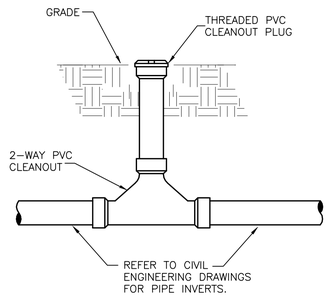

EXTERIOR 2-WAY CLEANOUT

5

NO SCALE

Atlantic COMMUNITIES
Marine Corps
A Lend Lease Company

INCIDENT & INJURY FREE
SIN LESIÓN O ACCIDENTE

Actus
Lend Lease

Issue:	Date:
Issue:	Date:

02-08-2011
100% SUBMITTAL

PERRIN ENGINEERING
A DIVISION OF CPI CONSULTING, INC.
MECHANICAL AND PLUMBING
77 DOWNEY ST.
HOPKINTON,MA 01748
P: 508-497-5033
F: 774-759-3084

CHRISTINE Y. PERRIN
MECHANICAL
No. 36375
REGISTERED PROFESSIONAL ENGINEER
COMMONWEALTH OF MASSACHUSETTS

PHASE 3
50 NEW HOMES AT KNOX LANDING
CAMP LEJEUNE NORTH CAROLINA

PLUMBING SCHEDULES AND DETAILS

Project No:	10-003
Drawn:	CP
Checked:	CP
Approved:	CP
*Scale:	1/4"=1'-0"

*use graphic scales if sheet size varies from 22 x 34

SHEET 59 OF 72

P5.01

HVAC SYMBOLS

UP DN	SUPPLY DUCT (UP & DOWN)
UP DN	EXHAUST DUCT (UP & DOWN)
	FLEXIBLE DUCTWORK TURNING UP
	FLEXIBLE DUCT TO CEILING SUPPLY REGISTER
	RETURN CEILING REGISTER
	VANED ELBOW (PROVIDE ALL SQUARE OR RECTANGULAR ELBOWS WITH VANES EVEN IF SYMBOL IS MISSING)
	STANDARD RADIUS ELBOW
10x8	NEW DUCT (WIDTH x DEPTH)
45° SUPPLY	STANDARD BRANCH SUPPLY OR RETURN, NO SPLITTER (45° TAP)
45° RETURN	
	TRANSFER DUCT WITH CEILING-MOUNTED GRILLES
100 CFM SAR-3	NUMBERS INDICATE AIRFLOW RATE AND REGISTER NUMBER. REFER TO REGISTER SCHEDULE FOR CORRESPONDING SIZES.
T	WALL-MOUNTED THERMOSTAT
	PIPE TURNING DOWN
	PIPE WITH TRAP

ABBREVIATIONS

A, AMPS	AMPERE
AHU	AIR HANDLING UNIT
BT	BUILDING TYPE
CFM	CUBIC FEET PER MINUTE
DN	DOWN
EF	EXHAUST FAN
ESP	EXTERNAL STATIC PRESSURE
HP	HORSE POWER
HP-1	HEAT PUMP #1
IN	INCHES
MBH	MILLION BTU PER HOUR
OA	OUTSIDE AIR
RAR	RETURN AIR REGISTER
SAR	SUPPLY AIR REGISTER

FIRE BLOCKING

FIRE BLOCKING MATERIALS SHALL COMPLY WITH SECTION R602.8.1 OF THE 2006 IRC.

FIRE BLOCKING SHALL BE PROVIDED TO CUT OFF ALL CONCEALED DRAFT OPENINGS (BOTH VERTICAL AND HORIZONTAL) AND TO FORM AN EFFECTIVE FIRE BARRIER BETWEEN FLOORS, AND BETWEEN A TOP STORY AND THE ATTIC SPACE. FIRE BLOCKING SHALL BE PROVIDED IN WOOD-FRAME CONSTRUCTION IN THE FOLLOWING LOCATIONS.

1. IN CONCEALED SPACES OF STUD WALLS AND PARTITIONS, INCLUDING FURRED SPACES AND PARALLEL ROWS OF STUDS OR STAGGERED STUDS: AS FOLLOWS:
   1.1 VERTICALLY AT THE CEILING AND FLOOR LEVELS.
   1.2 HORIZONTALLY AT INTERVALS NOT EXCEEDING 10 FEET.

2. AT ALL INTERCONNECTIONS BETWEEN CONCEALED VERTICAL AND HORIZONTAL SPACES SUCH AS OCCUR AT SOFFITS, DROP CEILINGS AND COVE CEILINGS.

3. IN CONCEALED SPACES BETWEEN STAIR STRINGERS AT THE TOP AND BOTTOM OF THE RUN. ENCLOSED SPACES UNDER STAIRS SHALL COMPLY WITH SECTION R311.2.2 OF THE 2006 IRC.

4. AT OPENINGS AROUND VENTS, PIPES, AND DUCTS AT CEILING AND FLOOR LEVEL, WITH AN APPROVED MATERIAL TO RESIST THE FREE PASSAGE OF FLAME AND PRODUCTS OF COMBUSTION.

5. FOR THE FIRE BLOCKING OF CHIMNEYS AND FIREPLACES, SEE SECTION R1001.16 OF THE 2006 IRC.

6. FIRE BLOCKING OF CORNICES OF A TWO-FAMILY DWELLING IS REQUIRED AT THE LINE OF DWELLING UNIT SEPARATION.

GENERAL NOTES

1. ALL WORK SHALL BE COMPLETED IN ACCORDANCE WITH THE 2006 IMC, INCLUDING NC AMENMENTS, AND ALL APPLICABLE NORTH CAROLINA CODES AND REGULATIONS.

2. THE DESIGN IS BASED ON ASHRAE STANDARDS. HEATING AND COOLING LOSS/GAIN LOADS ARE BASED ON MANUAL J, 8TH EDITION, VERSION TWO, "RESIDENTIAL LOAD CALCULATIONS", USING THE ELITE SOFTWARE LOAD CALCULATION PROGRAM.

3. MECHANICAL WORK IS INDICATED DIAGRAMMATICALLY. EXACT LOCATIONS OF ALL COMPONENTS ARE TO BE VERIFIED AND COORDINATED IN THE FIELD AND WITH THE OTHER DISCIPLINES. FIELD MODIFICATIONS SUCH AS OFFSETS IN PIPING OR DUCTWORK NEEDED DUE TO OBSTRUCTIONS OR INTERFERENCES SHALL BE PROVIDED AT NO EXTRA COST.

4. COORDINATE ALL INSTALLATIONS WITH THE OTHER TRADES, PRIOR TO COMMENCING ANY INSTALLATIONS. NO EXTRA PAYMENTS WILL BE PROVIDED FOR WORK THAT HAS TO BE REDONE BECAUSE OF LACK OF COORDINATION.

5. REFER TO ARCHITECTURAL DRAWINGS FOR EXACT LOCATIONS OF REGISTERS AND COORDINATE TO BE A MINIMUM OF 3 FEET FROM SMOKE DETECTORS.

6. THERMOSTATS AND FAN SWITCHES SHALL BE MOUNTED PER ELECTRICAL DRAWINGS.

7. ALL INSTALLATIONS SHALL ALLOW EASY ACCESS TO ALL EQUIPMENT, DAMPERS, FILTERS, CONTROLS, ETC., FOR SERVICE MAINTENANCE AND REPLACEMENT.

8. ALL DUCTWORK SHALL BE INSTALLED PARALLEL TO WALLS AND FLOORS AND IN ACCORDANCE WITH CODES AND STANDARDS SET FORTH IN ASHRAE, SMACNA, NFPA FOR LOW PRESSURE DUCTWORK.

9. ALL EQUIPMENT AND DUCTWORK SHALL BE INDEPENDENTLY SUPPORTED FROM STRUCTURE ABOVE.

10. INSTALL ALL EQUIPMENT PER EQUIPMENT MANUFACTURER'S RECOMMENDATIONS AND REQUIREMENTS. CONNECTION TO EQUIPMENT SHALL BE VERIFIED WITH MANUFACTURER'S CERTIFIED DRAWINGS. TRANSITIONS TO ALL EQUIPMENT SHALL BE VERIFIED AND PROVIDED FOR EQUIPMENT FURNISHED.

11. DUCT CONSTRUCTION SHALL BE IN ACCORDANCE WITH THE LATEST EDITION OF THE SMACNA HVAC DUCT CONSTRUCTION STANDARD.

1. 12. SUPPLY AND INSTALL CONDENSATE PIPING FULL SIZE, TRAPPED, AND ROUTED TO FLOOR DRAIN. TRAP SHALL HAVE DEPTH OF MINIMUM 1" PLUS UNIT STATIC PRESSURE TO PROVIDE THE REQUIRED TRAP SEAL. REFER TO DETAIL ON SHM5.01.

13. ALL DUCT SIZES SHOWN ARE INSIDE CLEAR DIMENSIONS.

14. DUCTWORK SHALL COMPLY WITH UL 181.

15. PROVIDE STEEL SUPPLY AND RETURN AIR REGISTERS FACTORY PAINTED WHITE AND WITH A BALANCING DAMPER.

16. SEAL ALL DUCT CONNECTIONS AND JOINTS THOROUGHLY.

17. PROVIDE VAPOR TIGHT SEAL, USING GLASS FABRIC EMBEDDED WITH MASTIC, AT ALL DUCT INSULATION SEAMS AND JOINTS.

18. PROVIDE BACKDRAFT DAMPERS AT ALL EXHAUST FAN POINTS OF EXIT FROM BUILDING.

19. PROVIDE FLEXIBLE CONNECTIONS AT SUPPLY AIR DUCT CONNECTIONS TO AHU AND RETURN AIR DUCT CONNECTIONS TO RETURN AIR PLENUM.

19. INSULATE DUCTWORK IN ALL SPACES. R-4 SHALL BE USED IN CONDITIONED SPACES AND R-8 IN UNCONDITIONED SPACES (ATTIC). VAPOR BARRIER SHALL BE MAINTAINED AND REPAIRED.

20. CONTRACTORS TO PROVIDE RECORD AS-BUILT DRAWINGS FOR ANY DEVIATIONS FROM PLANS.

21. SEE SPECIFICATIONS FOR ADDITIONAL REQUIREMENTS.

Atlantic COMMUNITIES
Marine Corps
A Lend Lease Community

INCIDENT & INJURY FREE
SIN LESIÓN O ACCIDENTE

LIVE SAFE WORK SAFE
VIVA SEGURO TRABAJA SEGURO

Actus
Lend Lease

	Issue:	Date:
100% SUBMITTAL		
02-08-2011		

PERRIN ENGINEERING
A DIVISION OF CVP CONSULTING, INC.
MECHANICAL AND PLUMBING
77 DOWNEY ST. P: 508-497-5033
HOPKINTON,MA 01748 F: 774-759-3084

CHRISTINE Y. PERRIN MECHANICAL No. 34375 REGISTERED PROFESSIONAL ENGINEER

PHASE 3
50 NEW HOMES AT KNOX LANDING
CAMP LEJEUNE NORTH CAROLINA

MECHANICAL LEGEND AND NOTES

Project No:	10-003
Drawn:	CP
Checked:	CP
Approved:	CP
*Scale:	1/4"=1'-0"

*use graphic scales if sheet size varies from 22 x 34

SHEET 60 OF 72

M0.01

ROOM AIRFLOW REQUIREMENTS

BUILDING LOADS BT 401

	MBH SENSIBLE	MBH LATENT	NET TONS
FRONT DOOR SOUTHEAST	16,520	7,350	2.0
FRONT DOOR SOUTH	15,340	7,350	1.9
FRONT DOOR NORTHWEST	16,180	7,350	2.0

FRONT DOOR FACING SOUTHEAST

	REQUIRED CFM
FAMILY ROOM	100
GREAT ROOM	85–115
DINING ROOM	50
KITCHEN	75
LAUNDRY/MUD	30
POWDER RM	20

FRONT DOOR FACING SOUTH

	REQUIRED CFM
FAMILY ROOM	80
GREAT ROOM	85–105
DINING ROOM	50–70
KITCHEN	75
LAUNDRY/MUD	30
POWDER RM	20

FRONT DOOR FACING NORTHWEST

	REQUIRED CFM
FAMILY ROOM	90
GREAT ROOM	90–115
DINING ROOM	50–70
KITCHEN	75
LAUNDRY/MUD	30
POWDER RM	20

GENERAL NOTES

1. ALL WORK SHALL BE COMPLETED IN ACCORDANCE WITH ALL APPLICABLE NORTH CAROLINA CODES AND REGULATIONS.

2. MECHANICAL WORK IS INDICATED DIAGRAMMATICALLY. EXACT LOCATIONS OF ALL COMPONENTS ARE TO BE VERIFIED AND COORDINATED IN THE FIELD AND WITH THE OTHER DISCIPLINES.

3. COORDINATE ALL INSTALLATIONS WITH THE OTHER TRADES, PRIOR TO COMMENCING ANY INSTALLATIONS. NO EXTRA PAYMENTS WILL BE PROVIDED FOR WORK THAT HAS TO BE REDONE BECAUSE OF LACK OF COORDINATION.

4. THERMOSTATS AND FAN SWITCHES SHALL BE MOUNTED PER ELECTRICAL DRAWINGS.

5. ALL INSTALLATIONS SHALL ALLOW EASY ACCESS TO ALL EQUIPMENT, DAMPERS, FILTERS, CONTROLS, ETC., FOR SERVICE MAINTENANCE AND REPLACEMENT.

6. ALL DUCTWORK SHALL BE INSTALLED PARALLEL TO WALLS AND FLOORS AND IN ACCORDANCE WITH CODES AND STANDARDS SET FORTH IN ASHRAE, SMACNA, NFPA FOR LOW PRESSURE DUCTWORK.

7. ALL EQUIPMENT AND DUCTWORK SHALL BE INDEPENDENTLY SUPPORTED FROM STRUCTURE ABOVE.

8. SEE SPECIFICATIONS FOR ADDITIONAL REQUIREMENTS.

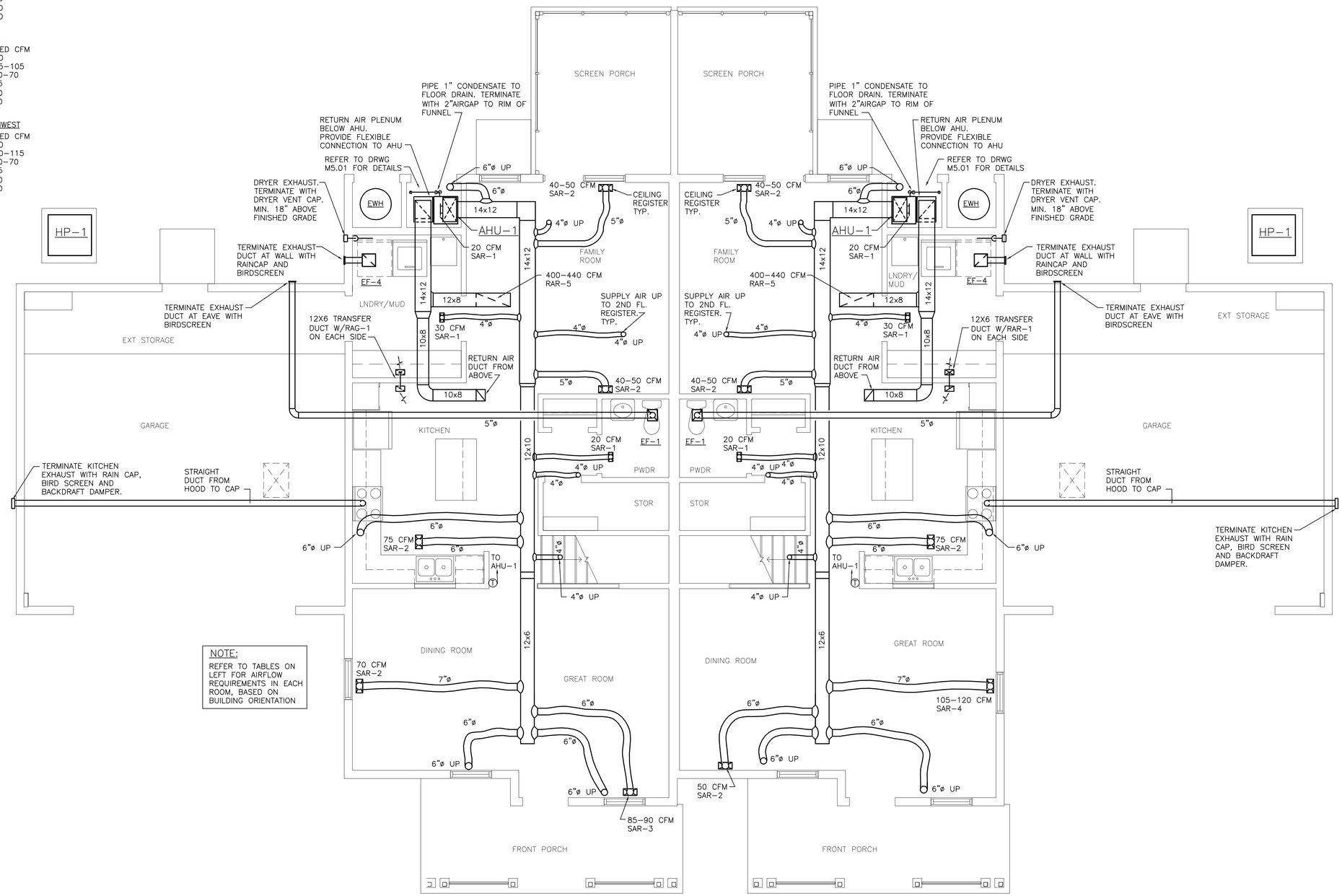

NOTE:
REFER TO TABLES ON LEFT FOR AIRFLOW REQUIREMENTS IN EACH ROOM, BASED ON BUILDING ORIENTATION

BUILDING TYPE 401 – LOWER LEVEL DUCTWORK PLAN

SCALE: 1/4"=1'-0"

Atlantic COMMUNITIES
Marine Corps
A Lend Lease Community

INCIDENT & INJURY FREE
SIN LESIÓN O ACCIDENTE
LIVE SAFE WORK SAFE
VIVA SEGURO TRABAJE SEGURO

Actus
Lend Lease

Issue:	Date:
100% SUBMITTAL	02-08-2011

PERRIN ENGINEERING
A DIVISION OF PERRIN BUILDING, INC.
MECHANICAL AND PLUMBING
77 DOWNEY ST. P: 508-497-5033
HOPKINTON,MA 01748 F: 774-759-3084

CHRISTINE Y. PERRIN MECHANICAL No. 36315 REGISTERED PROFESSIONAL ENGINEER

PHASE 3
50 NEW HOMES AT KNOX LANDING
CAMP LEJEUNE NORTH CAROLINA

BUILDING TYPE 401
LOWER LEVEL
DUCTWORK PLAN

Project No:	10-003
Drawn:	CP
Checked:	CP
Approved:	CP
*Scale:	1/4"=1'-0"
*use graphic scales if sheet size varies from 22 x 34	
SHEET 61 OF 72	

M1.01

ROOM AIR FLOW REQUIREMENTS

FRONT DOOR FACING SOUTHEAST

	REQUIRED CFM
MASTER BEDROOM	95
BEDROOM 2	65
BEDROOM 3	85
BEDROOM 4	70
HALLWAY	30
MASTER BATHROOM/W.I.C.	50
SECOND BATHROOM	35

FRONT DOOR FACING SOUTH

	REQUIRED CFM
MASTER BEDROOM	85
BEDROOM 2	50
BEDROOM 3	75
BEDROOM 4	65
HALLWAY	40
MASTER BATHROOM/W.I.C.	50
SECOND BATHROOM	35

FRONT DOOR FACING NORTHEAST

	REQUIRED CFM
MASTER BEDROOM	90
BEDROOM 2	60
BEDROOM 3	80
BEDROOM 4	70
HALLWAY	40
MASTER BATHROOM/W.I.C.	50
SECOND BATHROOM	35

NOTE:
REFER TO TABLES ON LEFT FOR AIRFLOW REQUIREMENTS IN EACH ROOM, BASED ON BUILDING ORIENTATION

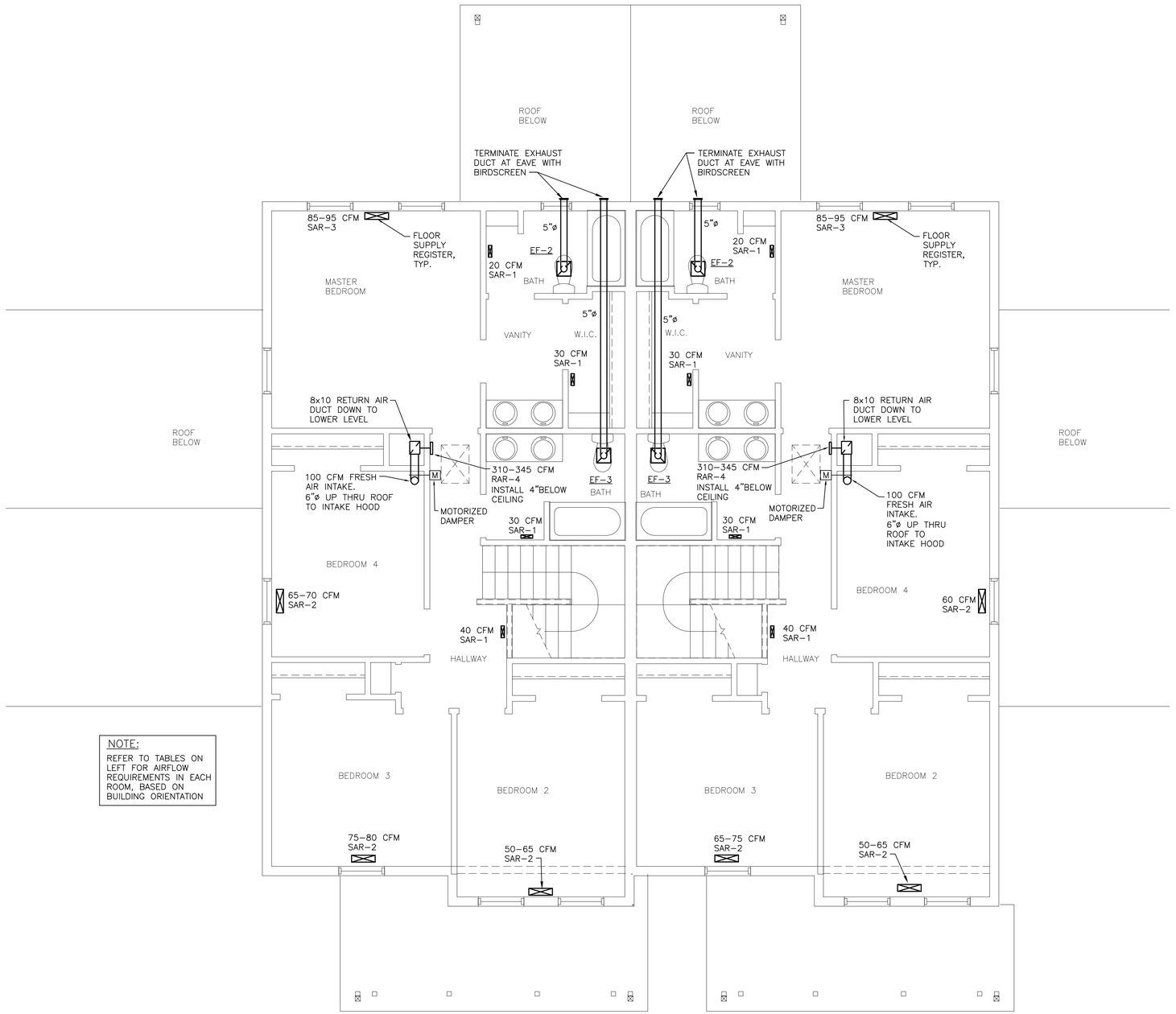

BUILDING TYPE 401 – UPPER LEVEL DUCTWORK PLAN

SCALE: 1/4"=1'-0"

Atlantic COMMUNITIES
Marine Corps
A Lend Lease Community

INCIDENT & INJURY FREE
SIN LESIÓN O ACCIDENTE

LIVE SAFE WORK SAFE
VIVA SEGURO TRABAJE SEGURO

Actus
Lend Lease

Issue:	Date:
Issue:	Date:
100% SUBMITTAL	02-08-2011

PERRIN ENGINEERING
A DIVISION OF P.P. CONSULTING, INC.
MECHANICAL AND PLUMBING
77 DOWNEY ST
HOPKINTON,MA 01748
P: 508-497-5033
F: 774-759-3084

COMMONWEALTH OF MASSACHUSETTS
CHRISTIANE Y. PERRIN
MECHANICAL
No. 36015
REGISTERED PROFESSIONAL ENGINEER

PHASE 3
50 NEW HOMES AT KNOX LANDING
CAMP LEJEUNE NORTH CAROLINA

BUILDING TYPE 401
UPPER LEVEL
DUCTWORK PLAN

Project No:	10-003
Drawn:	CP
Checked:	CP
Approved:	CP
*Scale:	1/4"=1'-0"

*use graphic scales if sheet size varies from 22 x 34

SHEET 62 OF 72

M1.02

BUILDING LOADS BT 402

	MBH SENSIBLE	MBH LATENT	NET TONS
FRONT DOOR SOUTHEAST	19,410	7,580	2.3
FRONT DOOR SOUTH	18,990	7,580	2.2

ROOM AIRFLOW REQUIREMENTS

FRONT DOOR FACING SOUTHEAST

	REQUIRED CFM
FAMILY ROOM	150
GREAT ROOM	115
DINING ROOM	50
KITCHEN	95
LAUNDRY/MUD	30
MASTER BEDROOM	75
BEDROOM 2	80
BEDROOM 3	80
BEDROOM 4	100
MASTER BATH	45
SECOND BATH	30
HALLWAY	40

FRONT DOOR FACING SOUTH

	REQUIRED CFM
FAMILY ROOM	140
GREAT ROOM	115
DINING ROOM	50
KITCHEN	95
LAUNDRY/MUD	30
MASTER BEDROOM	80
BEDROOM 2	80
BEDROOM 3	90
BEDROOM 4	100
MASTER BATH	45
SECOND BATH	30
HALLWAY	40

GENERAL NOTES

1. ALL WORK SHALL BE COMPLETED IN ACCORDANCE WITH ALL APPLICABLE NORTH CAROLINA CODES AND REGULATIONS.

2. MECHANICAL WORK IS INDICATED DIAGRAMMATICALLY. EXACT LOCATIONS OF ALL COMPONENTS ARE TO BE VERIFIED AND COORDINATED IN THE FIELD AND WITH THE OTHER DISCIPLINES.

3. COORDINATE ALL INSTALLATIONS WITH THE OTHER TRADES, PRIOR TO COMMENCING ANY INSTALLATIONS. NO EXTRA PAYMENTS WILL BE PROVIDED FOR WORK THAT HAS TO BE REDONE BECAUSE OF LACK OF COORDINATION.

4. THERMOSTATS AND FAN SWITCHES SHALL BE MOUNTED PER ELECTRICAL DRAWINGS.

5. ALL INSTALLATIONS SHALL ALLOW EASY ACCESS TO ALL EQUIPMENT, DAMPERS, FILTERS, CONTROLS, ETC., FOR SERVICE MAINTENANCE AND REPLACEMENT.

6. ALL DUCTWORK SHALL BE INSTALLED PARALLEL TO WALLS AND FLOORS AND IN ACCORDANCE WITH CODES AND STANDARDS SET FORTH IN ASHRAE, SMACNA, NFPA FOR LOW PRESSURE DUCTWORK.

7. ALL EQUIPMENT AND DUCTWORK SHALL BE INDEPENDENTLY SUPPORTED FROM STRUCTURE ABOVE.

8. SEE SPECIFICATIONS FOR ADDITIONAL REQUIREMENTS.

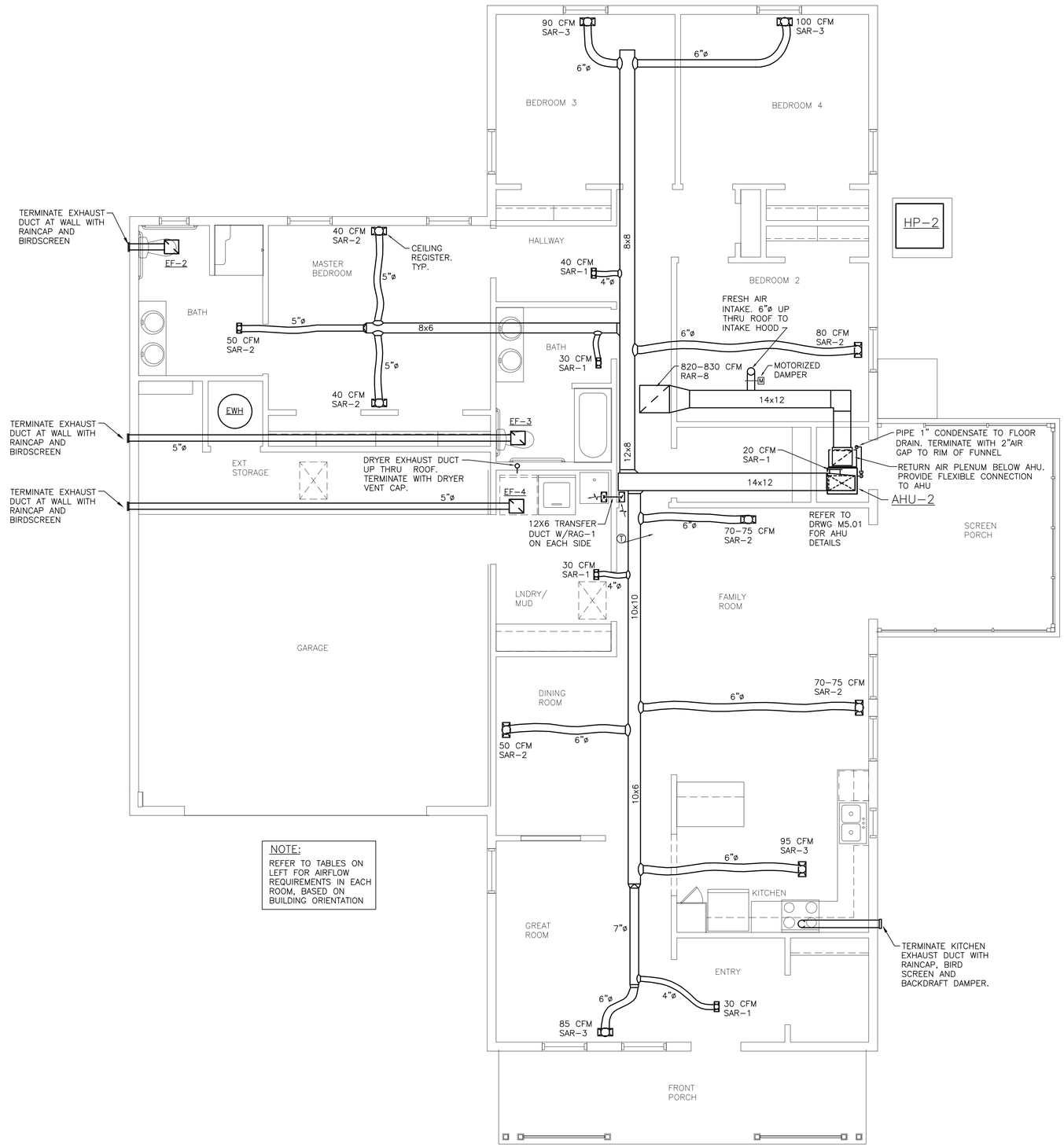

NOTE:
REFER TO TABLES ON LEFT FOR AIRFLOW REQUIREMENTS IN EACH ROOM, BASED ON BUILDING ORIENTATION

BUILDING TYPE 402 – DUCTWORK PLAN
SCALE: 1/4"=1'-0"

Atlantic COMMUNITIES
Marine Corps
A Lend Lease Community

INCIDENT & INJURY FREE
SIN LESIÓN O ACCIDENTE

LIVE SAFE WORK SAFE
VIVA SEGURO TRABAJE SEGURO

Actus
Lend Lease

Issue:	Date:
100% SUBMITTAL	02-08-2011

PERRIN ENGINEERING
A DIVISION OF CPI CONSULTING, INC.
MECHANICAL AND PLUMBING
77 DOWNEY ST.
HOPKINTON,MA 01748
P: 508-497-5033
F: 774-759-3084

CHRISTINE Y. PERRIN MECHANICAL No. 36375 REGISTERED PROFESSIONAL ENGINEER

PHASE 3
50 NEW HOMES AT KNOX LANDING
CAMP LEJEUNE NORTH CAROLINA

BUILDING TYPE 402 DUCTWORK PLAN

Project No:	10-003
Drawn:	CP
Checked:	CP
Approved:	CP
*Scale:	1/4"=1'-0"

*use graphic scales if sheet size varies from 22 x 34

SHEET 63 OF 72

M1.03

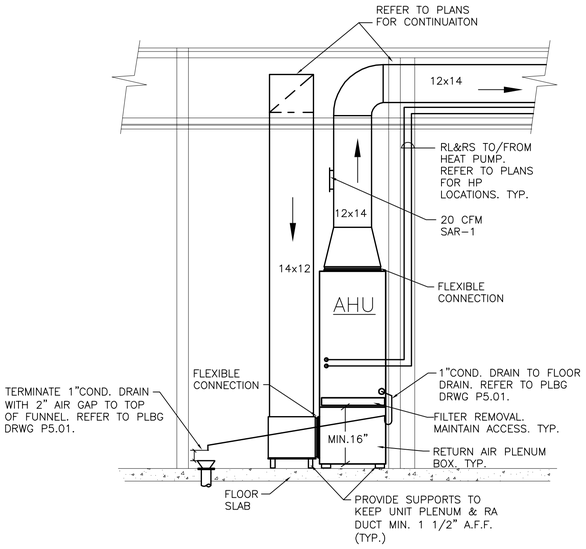

SECTION THRU MECHANICAL EQUIPMENT ROOM – TYPICAL FOR BT401

SCALE: 1/2"=1'-0"

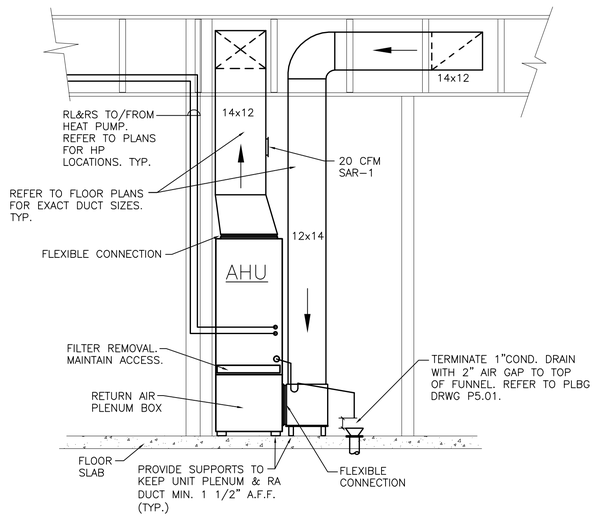

SECTION THRU MECHANICAL EQUIPMENT ROOM – BT402

SCALE: 1/2"=1'-0"

Atlantic COMMUNITIES
Marine Corps
A Lend Lease Community

INCIDENT & INJURY FREE
SIN LESIÓN O ACCIDENTE

LIVE SAFE WORK SAFE — VIVA SEGURO TRABAJE SEGURO

Actus
Lend Lease

	Issue:	Date:

02-08-2011

100% SUBMITTAL

PERRIN ENGINEERING
A DIVISION OF PERRIN BUILDING, INC.
MECHANICAL AND PLUMBING
77 DOWNEY ST. P: 508-497-5033
HOPKINTON,MA 01748 F: 774-759-3084

CHRISTINE Y. PERRIN MECHANICAL No. 36315 REGISTERED PROFESSIONAL ENGINEER

PHASE 3
50 NEW HOMES AT KNOX LANDING
CAMP LEJEUNE NORTH CAROLINA

MECHANICAL ROOM SECTIONS

Project No:	10-003
Drawn:	CP
Checked:	CP
Approved:	CP
*Scale:	1/4"=1'-0"
*use graphic scales if sheet size varies from 22 x 34	
SHEET 64 OF 72	

M2.01

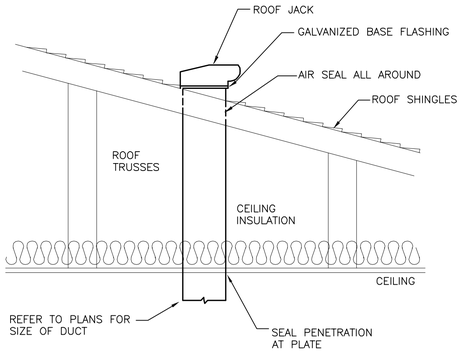

VENT THROUGH ROOF DETAIL | 1

NO SCALE

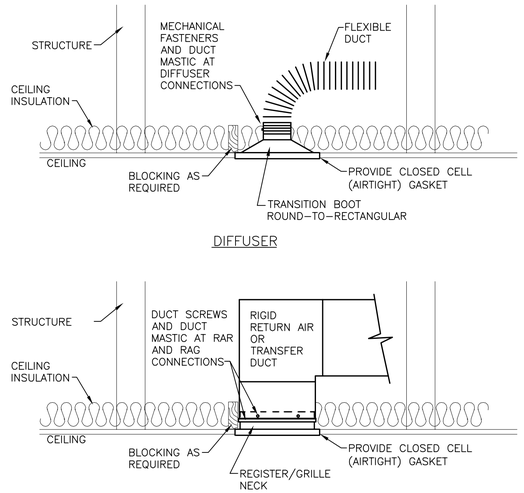

NOTE:
REFER TO FLOOR PLANS &
REGISTER SCHEDULE FOR SIZES

CEILING DIFFUSER & REGISTER DETAIL | 2

NO SCALE

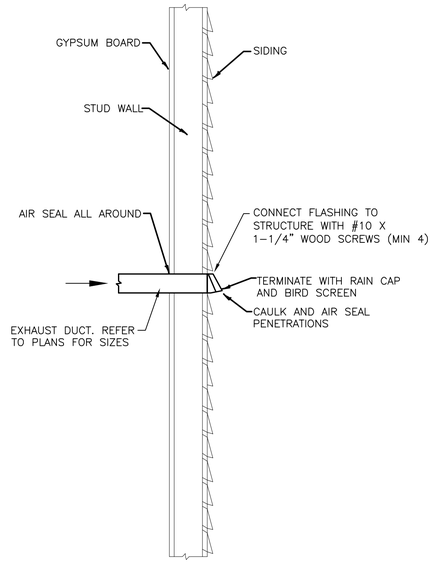

EXHAUST DUCT THRU WALL DETAIL | 3

NO SCALE

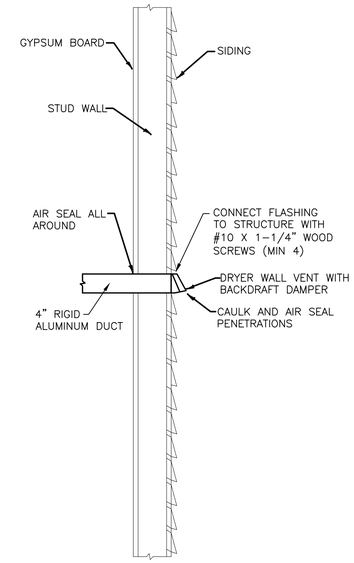

DRYER VENT THRU WALL DETAIL | 4

NO SCALE

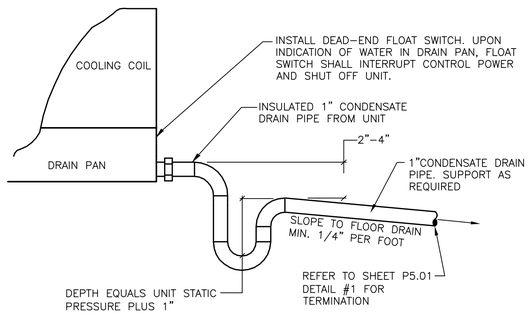

CONDENSATE DRAIN DETAIL | 5

NO SCALE

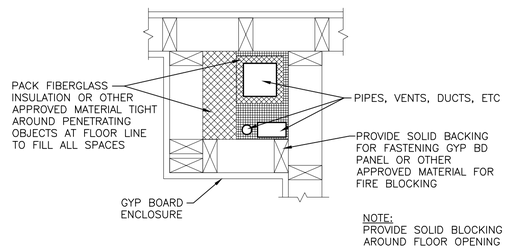

NOTE:
PROVIDE SOLID BLOCKING
AROUND FLOOR OPENING

FIREBLOCKING DETAIL AT VERTICAL CHASE

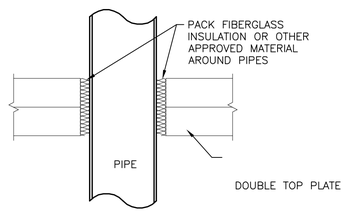

FIREBLOCKING AT PIPE PENETRATION AT PLATE/FLOOR LINE

FIRE BLOCKING DETAILS | 6

NO SCALE

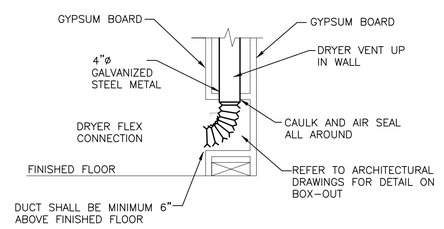

NOTES:
1. DRYER VENT TO TERMINATE MINIMUM 18" ABOVE GRADE FOR BUILDING TYPE 401.

2. DRYER VENT TO BE GALVANIZED SHEET METAL WITH SMOOTH INTERIOR FINISH AND JOINTS RUNNING IN THE DIRECTION OF AIRFLOW. NO SHARP EDGES ON THE INSIDE. ALUMINUM TAPE WRAP ALL JOINTS. ALL CHANGES IN DIRECTIONS TO USE FULL RADIUS ELBOWS.

DRYER VENT IN WALL DETAIL | 7

NO SCALE

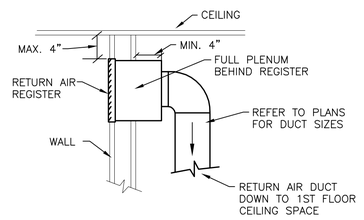

2ND FLOOR RETURN AIR REGISTER DETAIL

RETURN AIR REGISTER DETAIL | 8

NO SCALE

Atlantic COMMUNITIES
Marine Corps
A Lend Lease Community

INCIDENT & INJURY FREE
SIN LESIÓN O ACCIDENTE

LIVE SAFE WORK SAFE
VIVA SEGURO TRABAJE SEGURO

Actus
Lend Lease

	Issue:	Date:

02-08-2011
100% SUBMITTAL

PERRIN ENGINEERING
A DIVISION OF GPD GROUP CONSULTING, INC.
MECHANICAL AND PLUMBING
77 DOWNEY ST. P: 508-497-5033
HOPKINTON,MA 01748 F: 774-759-3084

CHRISTINE Y. PETRIN
MECHANICAL
No. 38515
REGISTERED PROFESSIONAL ENGINEER

PHASE 3
50 NEW HOMES AT KNOX LANDING
CAMP LEJEUNE NORTH CAROLINA

MECHANICAL DETAILS

Project No:	10-003
Drawn:	CP
Checked:	CP
Approved:	CP
*Scale:	1/4"=1'-0"

*use graphic scales if sheet size varies from 22 x 34

SHEET 65 OF 72

M5.01

AIR HANDLING UNIT SCHEDULE

SERVICE	TAG	ORIENTATION	AIRFLOW		SUPPLY AIR FAN			COOLING						HEATING		ELECTRICAL	MANUFACTURER	MODEL	REMARKS
								CAPACITY			LEAVING AIR								
			TOTAL (CFM)	MINIMUM OUTSIDE AIR (CFM)	ESP (IN.)	MOTOR HP	SPEED	TOTAL (NOM. TONS)	TOTAL (MBH)	SENSIBLE (MBH)	DRY BULB (°F)	WET BULB (°F)	REFRIGERANT	MIN. HEAT PUMP CAPACITY (MBH)	SUPPLEMENTAL ELECTRIC HEAT (kW)	(V/PH/Hz)			
BT 401	AHU-1	SE S, NW	745 - 810	100	0.4	1/3	HIGH	2	23,300	16,000	56	56	R410A	13,600	4.8	240/1/60	TRANE	TEC3F30	SEE NOTES
BT 402	AHU-2	SE, S	885 - 910	100	0.5	1/3	HIGH	2.5	26,000	18,300	56	56	R410A	15,700	7.7	240/1/60	TRANE	TEC3F36	SEE NOTES

NOTES:
1. INTERLOCK AHU FAN MOTOR WITH OUTSIDE AIR INTAKE DAMPER. DAMPER SHALL OPEN WHEN FAN IS ACTIVATED . DAMPER SHALL CLOSE WHEN FAN IS STOPPED.
2. REFER TO FLOOR PLANS FOR EXACT FLOW RATES FOR EACH UNIT
3. CAREFULLY COORDINATE INSTALLATION WITH PLUMBING CONTRACTOR

HEAT PUMP SCHEDULE

SERVICE	TAG	CAPACITY @ 95°F	COMPRESSOR			REFRIGERANT	SEER	ELECTRICAL	MANUFACTURER	MODEL	REMARKS
		NOMINAL COOLING (TONS)	NUMBER OF COMPRESSORS	MCA (A)	MAX. FUSE (A)		MIN.	(V/PH/Hz)			
AHU-1	HP-1	2	1	15	20	R410A	13	240/1/60	TRANE	4TWR3024A1	SEE NOTES
AHU-2	HP-2	2.5	1	17	25	R410A	13	240/1/60	TRANE	4TWR3030A1	SEE NOTES

NOTES:
1. INTERLOCK WITH CORRESPONDING AHU
2. LOCATE WHERE SHOWN ON ARCHITECTURAL DRAWINGS

FAN SCHEDULE

TAG	SERVICE	TYPE	AIRFLOW (CFM)	ESP (IN.)	AMPS	ELECTRICAL V/PH/HZ	MANUFACTUER MODEL NO.
EF-1	POWDER ROOM	CEILING	50	0.3	1.0	120/1/60	PROGRESS PV020-30
EF-2	MASTER BATH ROOM	CEILING	70	0.2	1.0	120/1/60	PROGRESS PV020-30
EF-3	SECOND BATH ROOM	CEILING	70	0.2	1.0	120/1/60	PROGRESS PV020-30
EF-4	LAUNDRY ROOM	CEILING	50	0.3	1.0	120/1/60	PROGRESS PV020-30

DIFFUSER AND REGISTER SCHEDULE

TAG	TYPE	CFM RANGE	NECK SIZE (IN.xIN.)	MODULE SIZE (IN. x IN.)
SAR-1	SUPPLY REGISTER	-45	6x6	8x8
SAR-2	SUPPLY REGISTER	-80	8x6	10x8
SAR-3	SUPPLY REGISTER	-100	10x6	12x8
SAR-4	SUPPLY REGISTER	-120	12x6	14x8
SAR-5	SUPPLY REGISTER	-150	14x6	16x8
RAR-1	RETURN REGISTER	-180	10x10	12x12
RAR-2	RETURN REGISTER	185-220	12x10	14x12
RAR-3	RETURN REGISTER	225-270	12x12	14x14
RAR-4	RETURN REGISTER	275-360	14x14 12x18	16x16 14x20
RAR-5	RETURN REGISTER	365-490	16x16 12x24	18x18 14x26
RAR-6	RETURN REGISTER	495-620	30x12	32x14
RAR-7	RETURN REGISTER	625-780	20x20	22x22
RAR-8	RETURN REGISTER	790-1,000	24x22	26x24
RAG-1	TRANSFER GRILLE	-180	10x10	12x12

NOTES:
1. PROVIDE ADAPTERS FOR TRANSITION FROM ROUND FLEX TO RECTANGULAR SUPPLY REGISTERS
2. REGISTERS TO BE SURFACE-MOUNTED FOR WALL AND CEILING INSTALLATIONS.
3. NO DAMPER IN RAG-1

MOTORIZED DAMPER SCHEDULE

UNIT	LOCATION	TYPE	SERVICE	INTERLOCK WITH	DIMENSIONS DIAM. (IN.)	MANUFACTURER, MODEL	COMMENTS
M	OA INTAKE	LOW LEAKAGE OPPOSED BLADE	EACH AHU	CORRESPONDING AHU	6	RUSKIN CDRS15	SEE NOTES

NOTES:
1. PROVIDE WITH ELECTRIC ACTUATOR
2. INTERLOCK DAMPER WITH CORRESPONDING AHU. DAMPER TO OPEN WHEN AHU IS ACTICATED
3. FAIL TO CLOSE.

Atlantic COMMUNITIES
Marine Corps
A Lend Lease Company

INCIDENT & INJURY FREE
SIN LESIÓN O ACCIDENTE

Actus
Lend Lease

Issue:	Date:
Issue:	Date:

02-08-2011
100% SUBMITTAL

PERRIN ENGINEERING
A DIVISION OF CP CONSULTING, INC.
MECHANICAL AND PLUMBING
17 DOWNEY ST
HOPKINTON,MA 01748
P: 508-497-5033
F: 774-759-3084

CHRISTIANE Y. PERRIN
COMMONWEALTH OF MASSACHUSETTS
MECHANICAL
No. 36015
REGISTERED PROFESSIONAL ENGINEER

PHASE 3
50 NEW HOMES AT KNOX LANDING
CAMP LEJEUNE NORTH CAROLINA

MECHANICAL SCHEDULES

Project No: 10-003
Drawn: CP
Checked: CP
Approved: CP
*Scale: 1/4"=1'-0"
*use graphic scales if sheet size varies from 22 x 34

SHEET 66 OF 72

M6.01

GENERAL NOTES

1. WORK SHALL CONFORM TO THE NATIONAL ELECTRICAL CODE, INTERNATIONAL BUILDING CODE, NFPA AND REQUIREMENTS OF LOCAL AUTHORITIES HAVING JURISDICTION.
2. THE WORD "CONTRACTOR" AS USED IN THE "ELECTRICAL WORK" SHALL MEAN THE ELECTRICAL SUBCONTRACTOR.
3. CONTRACTOR SHALL PAY FOR ALL PERMITS, INSURANCE AND TESTS, AND SHALL PROVIDE LABOR AND MATERIAL TO COMPLETE THE ELECTRICAL WORK SHOWN.
4. CONTRACTOR SHALL PAY ELECTRIC UTILITY COMPANY BACKCHARGES AND PROVIDE COORDINATION WITH SAME.
5. AUTOMATIC TEMPERATURE CONTROLS SHALL BE PROVIDED AND INSTALLED BY THE MECHANICAL SUBCONTRACTOR. STARTERS AND OTHER CONTROL DEVICES FOR EQUIPMENT SHALL BE PROVIDED BY THE MECHANICAL SUBCONTRACTOR FOR INSTALLATION AND CONNECTION BY THIS CONTRACTOR.
6. THE CONTRACTOR SHALL PROVIDE ALL TEMPORARY LIGHTING AND POWER.
7. DURING CONSTRUCTION, THE ELECTRICAL CONTRACTOR SHALL KEEP HIS PORTION OF THE WORK NEAT, CLEAN, AND ORDERLY.
8. ALL SYSTEMS SHALL BE TESTED FOR SHORT CIRCUITS AND GROUNDS PRIOR TO ENERGIZING, AND ANY DEFECTS SHALL BE CORRECTED.
9. ALL CUTTING AND PATCHING REQUIRED FOR ELECTRICAL WORK SHALL BE INCLUDED AS PART OF THIS SECTION.
10. COMPLETE SHOP DRAWINGS SHALL BE SUBMITTED FOR ALL ELECTRICAL EQUIPMENT TO BE PURCHASED BY THE CONTRACTOR. ALL SUBMITTALS SHALL BE UNDER ONE COVER, PARTIAL SUBMITTALS WILL NOT BE CONSIDERED. ALLOW TWO WEEKS FOR SUBMITTAL PROCESSING BY THE ENGINEER.
11. MATERIALS SHALL BE SPECIFICATION GRADE AND UL LISTED.
12. WHERE MATERIAL IS CALLED OUT IN THE LEGEND BY MANUFACTURER, TYPE OR CATALOG NUMBER, SUCH DESIGNATIONS ARE TO ESTABLISH STANDARDS OF DESIRED QUALITY. ACCEPTANCE OR REJECTIONS OF PROPOSED SUBSTITUTIONS SHALL BE SUBJECT TO THE APPROVAL OF THE ARCHITECT.
13. REFER TO ARCHITECTURAL DRAWINGS FOR EXACT LOCATION OF FIXTURES, EQUIPMENT AND DEVICES PRIOR TO ROUGHING IN FOR SAME.
14. WORK SHALL BE COORDINATED WITH THAT OF OTHER TRADES TO ELIMINATE INTERFERENCES.
15. EXACT LOCATIONS OF MECHANICAL EQUIPMENT, DEVICES, ETC., SHALL BE VERIFIED WITH HEATING, VENTILATING AND AIR CONDITIONING SUBCONTRACTOR PRIOR TO ROUGHING FOR SAME.
16. ELECTRICAL CONTRACTOR SHALL OBTAIN SHOP DRAWINGS/SPECIFICATIONS OF ALL EQUIPMENT FROM THE GENERAL CONTRACTOR PRIOR TO PURCHASING AND INSTALLING ELECTRICAL EQUIPMENT FOR SAME. NOTIFY ENGINEER OF ANY DISCREPANCIES BETWEEN ACTUAL EQUIPMENT INSTALLED AND CONTRACT DOCUMENTS.
17. ELECTRICAL WORK SHALL BE GUARANTEED FOR A PERIOD OF ONE YEAR FROM DATE OF WHICH SYSTEM IS PUT INTO SERVICE.
18. WORK SHALL BE GROUNDED IN ACCORDANCE WITH CODE REQUIREMENTS. COMPLETE EQUIPMENT GROUNDING SYSTEM SHALL BE INSTALLED.
19. WIRE AND COPPER, TYPE "THHN-THWN" INSULATED FOR 600 VOLTS, MINIMUM SIZE #14 AWG COPPER FOR 15 AMP CIRCUITS AND #12 FOR 20 AMP CIRCUITS.
20. CABLES SHALL BE RUN CONCEALED IN FINISHED AREAS. IN UNFINISHED AREAS, CABLES MAY BE RUN EXPOSED WHERE NOT SUBJECT TO DAMAGE.
21. BOXES SHALL BE GALVANIZED STEEL AND SHALL BE SIZED TO ACCOMMODATE THE EQUIPMENT OR APPARATUS TO BE INSTALLED. FIXTURES SUPPORTED ON THE CEILING OR ON THE WALL SHALL HAVE SUITABLE FIXTURE SUPPORT FOR THE SPECIFIC FIXTURE.
22. MAGNETIC PLUG-IN CIRCUIT BREAKER TYPE, DESIGNED FOR FLUSH MOUNTING AS INDICATED ON PLAN, AND HAVING CONNECTIONS TO 120/240 VOLT, 1 PHASE, 3 WIRE SERVICE. ALL BUS BARS SHALL BE COPPER. CABINETS SHALL BE MADE OF CODE GAUGE GALVANIZED SHEET STEEL, LOCKED DOOR, AND FLUSH HINGES. TYPEWRITTEN INDEX SHALL BE MOUNTED ON DOOR INSIDE TRANSPARENT COVER INDICATING LOAD SERVED. PANELS SHALL INCLUDE SEPARATE EQUIPMENT GROUND BUS AND BE MANUFACTURED BY EATON, GENERAL ELECTRIC, SQUARE D OR APPROVED EQUAL.
25. PANELBOARDS, DISCONNECT SWITCHES, AND CONTROLLERS SHALL HAVE NAMEPLATES OF BLACK LAMINATED PLASTIC WITH ENGRAVED WHITE LETTERS, SECURED WITH SELF-TAPPING SCREWS.
26. CONNECTIONS AT MOTORS SHALL BE MADE WITH 18" LENGTH OF 1/2 INCH FLEXIBLE LIQUID TIGHT CONDUIT.
27. CONTRACTOR SHALL PHASE BALANCE PANELBOARDS IN THE FIELD, LOAD ON EACH PHASE SHALL BE BALANCED WITHIN 10% OF EACH OTHER.
28. WALL PLATES SHALL BE PROVIDED FOR EACH SWITCH, RECEPTACLE, DATA AND TELEPHONE OUTLET. PROVIDE WALL PLATES WITH WHITE FINISH FOR ALL DEVICES.
29. TOGGLE SWITCHES SHALL BE OF THE SINGLE POLE A.C. QUIET TOGGLE TYPE FOR MOUNTING IN A SINGLE-GANG SPACING. TOGGLE SWITCHES SHALL BE FULLY RATED 20 AMPERES AT 120/277 VOLT.
30. DUPLEX WALL RECEPTACLES SHALL BE 2 POLE, 3 WIRE, GROUNDING TYPE 15 AMPERE, 125 VOLT WITH METAL PLASTER EARS. RECEPTACLES SHALL BE NEMA STANDARD CONFIGURATION 5-20R.
31. FUSED OR UNFUSED SAFETY SWITCHES SHALL BE TOTALLY ENCLOSED, HEAVY DUTY TYPE. SWITCHES SHALL HAVE VOLTAGE, HORSEPOWER AND AMPERE RATING SUITABLE FOR THE APPLICATION. PROVIDE NUMBER OF POLES AS REQUIRED. SWITCHES LOCATED EXTERIOR TO THE BUILDING OR IN DAMP/WET LOCATIONS SHALL BE IN A NEMA 3R ENCLOSURE.
32. FUSES SHALL BE DUAL ELEMENT, TIME DELAY TYPE, AS MANUFACTURED BY BUSSMAN, RELIANCE, OR APPROVED EQUAL.
33. LIGHTING FIXTURES SHALL BE INDIVIDUALLY SUPPORTED FROM THE STRUCTURAL BUILDING MEMBER.
34. CIRCUIT RUNS AS SHOWN ON THE PLANS ARE DIAGRAMMATIC ONLY; EXACT LOCATION AND METHOD OF SUPPORT SHALL BE DETERMINED IN THE FIELD.
35. CONTRACTOR SHALL COORDINATE WITH ALL UTILITIES AND THEIR REQUIREMENTS. CONFLICTS BETWEEN THE PLANS, SPECIFICATIONS AND OTHER REQUIREMENTS SHALL BE BROUGHT TO THE ATTENTION OF THE QUALITY CONTROL MANAGER IN WRITTING PRIOR TO COMMENCING WITH THE ASSOCIATED WORK. THIS CONTRACTOR SWHALL ARRANGE A PRE-CONSTRUCTION MEETING WITH THE UTILITIES ENGINEERS TO OBTAIN REQUIREMENTS AND ARRANGEMENTS OF SAME.
36. DRAWINGS ARE DIAGRAMATIC RACEWAY RUNS, DEVICE AND EQUIPMENT LOCATIONS SHALL BE DETERMINED AND COORDINATED IN THE FIELD SO AS TO BE IN COMPLETE REQUIREMENTS OF ALL CODES AND STANDARDS.
37. PENETRATIONS THROUGH FIRE RATED WALLS SHALL BE SEALED AS REQUIRED BY APPLICAL CODES TO MAINTAIN FIRE RATING INTEREST. BOXES AT EXTERIOR WALLS AND PARTY WALLS SHALL BE CAULKED BETWEEN BOX AND WALLBOARD.
38. LIGHTING AND RECEPTACLES SHALL BE ON SEPARATE CIRCUITS.
39. CIRCUITS TO ISLANDS SHALL BE RUN IN CONDUIT BELOW SLAB.
40. SMOKE DETECTORS SHALL NOT BE LOCATED WITHIN 3 FEET OF FANS OR DUCT REGISTERS.

LIGHTING FIXTURE SCHEDULE

FIXTURE LETTER	LOCATION	DESCRIPTION	MANUFACTURER & CATALOG NUMBER	MOUNTING	LAMPS TYPE	LAMPS WATTS	LAMPS QUANTITY	VOLTS
A	PORCH	SQUARE, BLACK, INCANDESCENT WALL LANTERN	PROGRESS P5607-31	WALL SURFACE	CFL-TC16	14	1	120
B	GARAGE AND LAUNDRY	48" X 7 3/4" FLUORESCENT FIXTURE WIITH ACRYLIC, PRISMATIC, WRAP AROUND LENS.	PROGRESS P7186-30EB	CEILING SURFACE	T8	32	2	120
C	KITCHEN	18"X52" FLUORESCENT FIXTURE W/WHITE "SOFT CLOUD" WRAPPAROUND ACRYLIC DIFFUSER	PROGRESS P7280-60EB	CEILING SURFACE	T8	32	4	120
D	KITCHEN UNDER CABINET	21-3/4"LX1-1/8"HX3-1/4"W FLUORESCENT TASK LIGHT WITH ROCKER SWITCH & WHITE ACRYLIC LENS	PROGRESS P7021-30EBWB	UNDER CABINET	F13T5	13W	1	120
E	OVER KITCHEN SINK	BRUSHED NICKLE, 9 1/2" ROUND FLUORESCENT FIXTURE W/WHITE GLASS DOME DIFFUSER	PROGRESS P3410-09	CEILING SURFACE	CFL-T2	13	2	120
F	STORAGE	WHITE 7 1/2" ROUND FLUORESCENT FIXTURE W/WHITE GLASS DOME DIFFUSER	PROGRESS P3408-30	CEILING SURFACE	CFL-T2	13	1	120
G	FRONT PORCH PHOTOCELL	PHOTOCELL -REFER TO ARCHITECTURAL ELEVATIONS FOR LOCATIONS	LEVITON 6308	WALL SURFACE	-	-	-	120
H	BATH/POWDER OVER VANITY	BRUSHED NICKEL DOUBLE FLUORESCENT FIXTURE WITH ETCHED GLASS SHADES	PROGRESS P3191-09	WALL SURFACE	CFL-T3	26	2	120
J	FOYER AND HALL	BRUSHED NICKEL FLUORESCENT ETCHED MELON GLASS BOWL W/CENTER LOCK UP	PROGRESS P3817-09	CEILING SURFACE	CFL-T2	13	2	120
K	BATH CEILING	BRUSHED NICKEL, 14" DIA FLUORESCENT W/ETCHED ALABASTER GLASS DIFFUSER	PROGRESS P3689-09	CEILING SURFACE	CFL-T2	13	2	120
L1	LIVING RM & FAMILY RM	52" WHITE CEILING FAN/LIGHT W/8 3/8" OPAL SCHOOL HOUSE STYLE GLASS DIFFUSER	PROGRESS P2501-30; P2601-30	CEILING SURFACE	A19	60	2	120
L2	BEDROOMS	42" WHITE CEILING FAN AND 10 5/8" DIA SHALLOW OPAL GLASS CLOSURE LIGHT FIXTURE	PROGRESS P2500-30; P2602-30	CEILING SURFACE	A19	60	2	120
M	DINNING RM, UP 5'-6" AFF	16" DIA PENDANT FIXTURE W/ETCHED WATER MARKED GLASS BOWL	PROGRESS P3581-09	CEILING PENDANT	A19	60	3	120
N	MECHANICAL ROOMS	OUTDOOR JELLY JAR WITH CLEAR GLASS. WALL MOUNT INSIDE ROOM OVER DOOR	PROGRESS P5602-31	WALL SURFACE	CFL-T3	32	1	-
P	WALK IN CLOSET	SAME AS TYPE "E" EXCEPT WHITE	PROGRESS P3410-30	CEILING SURFACE	CFL-T2	13	2	120
R	FULL CUT OFF 11'-6" AFG	9"HX14"W FLUORESCENT WALL PACK W/CUT OFF GLARE SHIELD AND SYMETRICAL LIGHT PATERN. PHOTO CELL CONTROLLED.	RAB WP2CF42W/PC	WALL SURFACE	GX24q-3 4-PIN	42	1	120
S	ADDRESS LIGHT	24 VOLT ADDRESS SIGN LIGHT	PROGRESS P5968-31WB	WALL RECESSED	CFL-T13 1/4	5	2	24
T	ATTIC SPACE	4 1/2" OD LAMP HOLDER WITH PULL CHAIN	LEVITON 8829-CW2	CEILING SURFACE	CFL	26	1	120

LIGHTING FIXTURE NOTES

1. THE ELECTRICAL CONTRACTOR SHALL FURNISH ALL LIGHTING FIXTURES AS DIRECTED BY THE D/B CONTRACTOR COMPLETE WITH MOUNTING ACCESSORIES TO MEET JOB REQUIREMENTS.
2. THE ELECTRICAL CONTRACTOR SHALL VERIFY FIXTURE MOUNTING AND LOCATION AGAINST ARCHITECT'S PLANS, ELEVATIONS AND DETAIL DRAWINGS. EXACT LOCATION OF ALL FIXTURES SHALL BE CONFIRMED WITH THE ARCHITECT PRIOR TO ROUGHING IN.
3. ALL FLUORESCENT T8 LAMPS ARE TO BE STANDARD WARM WHITE COLOR, 3000K UNLESS OTHERWISE SPECIFIED.
4. CFL TYPE TC16 LAMP = GE #85384 OR APPROVED EQUIVELANT; CFL TYPE T2 LAMP = GE #85383 OR APPROVED EQUAL; CFL TYPE T3 LAMP = GE #47446 OR APPROVED EQUAL.

LEGEND

SYMBOL	DESCRIPTION
B 2	FLUORESCENT LIGHTING FIXTURE TYPE 'B', CONTROLLED BY SWITCH 'a' AND CONNECTED TO CIRCUIT NUMBER '2'
	FLUORESCENT CHANNEL/STRIP LIGHT
	CEILING INCANDESCENT/H.I.D./FLUORESCENT LIGHTING FIXTURE
	WALL OUTLET AND INCANDESCENT/LED/FLUORESCENT LIGHTING FIXTURE
S_a	SINGLE POLE, 20 AMP, TOGGLE SWITCH CONTROLLING LIGHTS OR FANS 'a'
S^3	THREE WAY SWITCH (20 AMP)
S^4	FOUR WAY SWITCH (20 AMP)
S^{FT}	LIGHT AND EXHAUST FAN SWITCH WITH FAN TIMER COMBINATION. (LIGHT "OFF" FAN "ON" FOR 10 MINUTES) (EFI #500.504)
S^P	SWITCH AND PILOT LIGHT COMBINATION, PILOT LIGHT "ON" WHEN LIGHT IS "ON"
3	TAMPER RESISTANT, 20 AMP-125 VOLT DUPLEX RECEPTACLE CONENCTED TO CIRCUIT NUMBER '3'
	20 AMP-125 VOLT SINGLE RECEPTACLE.
	TAMPER RESISTANT DUPLEX RECEPTACLE MOUNTED AT COUNTER HEIGHT
	TAMPER RESISTANT,SPLIT WIRED DUPLEX RECEPTACLE. BOTTOM RECEPTACLE SWITCHED.
	TAMPER RESISTANT QUADRAPLEX RECEPTACLE
	POWER RECEPTACLE: 1=30A-3P-4W NEMA 14-30R DRYER RECEPTACLE 44"AFF; 2= 50A-3P-4W NEMA 14-50R RANGE RECEPTACLE 18" AFF
W	SINGLE GANG TELEPHONE OUTLET 'W' DENOTES WALL MOUNTED 5' AFF
	SINGLE GANG CAT 5E DATA OUTLET
	SINGLE GANG, 2 PORT COMBINATION TELEPHONE/CAT 5E DATA OUTLET
TV	CABLE TELEVISION OUTLET
TV	SINGLE GANG BOX WITH 3 PORT FACE PLATE CONNECTORS FOR CABLE TELEVISION, TELEPHONE AND CAT 5E.
	RECESSED MOUNTED LOAD CENTER - 120/240V, 1ø, 3W AS SCHEDULED
* F	EXHAUST FAN
* 2	MOTOR - NUMERAL DENOTES HORSEPOWER
	UNFUSED DISCONNECT SWITCH
45/60	FUSED DISCONNECT SWITCH - 60 AMP SWITCH WITH 45 AMP TIME DELAY FUSES
*	MAGNETIC MOTOR STARTER
	MANUAL MOTOR STARTER (THERMAL SWITCH)
KWH	KILOWATT HOUR METER
J, T	JUNCTION BOX - CEILING AND WALL MOUNTED RESPECTIVELY
	FLUSH FLOOR MOUNTED JUNCTION BOX.
S CO, SL	120V PHOTOELECTRIC, MULTIPLE STATION, SMOKE DETECTOR/CARBON MONOXIDE DETECTOR COMBINATION WITH BATTERY BACK UP. WHERE NO "CO" INDICATED THE UNIT SHALL BE A MULTIPLE STATION SMOKE DETECTOR ONLY. "SL"=WITH 177 CANDELLA STROBE LIGHT.
CO	120 VOLT MULTIPLE STATION CARBON MONOXIDE DETECTOR CONNECTED TO SMOKE ARAMS.
SL	177 CANDELLA STROBE LIGHT CONNECTED TO SMOKE AND CO ALARMS.
C	DOOR CHIME (PROGRESS #PC002-30)
	DOOR CHIME PUSH BUTTON
T	DOOR CHIME TRANSFORMER
—USE—	UNDERGROUND SERVICE ENTRANCE SYSTEM
G.C.	GENERAL CONTRACTOR
M.C.	MECHANICAL CONTRACTOR
E.C.	ELECTRICAL CONTRACTOR
C.B.	CIRCUIT BREAKER
GFI	GROUND FAULT CIRCUIT INTERRUPTER PROTECTED.
AFI	ARC FAULT CIRCUIT INTERRUPTER
AFF	ABOVE FINISHED FLOOR
AFG	ABOVE FINISHED GRADE
WP	WEATHERPROOF (NEMA 3R ENCLOSURE)

* INDICATES DEVICE TO BE FURNISHED BY OTHERS BUT INSTALLED AND/OR WIRED BY THE ELECTRICAL CONTRACTOR.

INCIDENT & INJURY FREE
SIN LESIÓN O ACCIDENTE
LIVE SAFE WORK SAFE · VIVA SEGURO TRABAJE SEGURO

Actus Lend Lease

Date:	Issue:
2/8/2011	100% SUBMITTAL
5/17/2011	1 BULLITIN NO. 1

M.J.SUPRANOVICZ ASSOCIATES
CONSULTING ELECTRICAL ENGINEERS
29 DIANDY ROAD T:(508)833-7559
SAGAMORE BEACH C:(978)835-0799
MA 02562 EMAIL: MJSAEE@AOL.COM

NORTH CAROLINA REGISTERED PE 5333 ENGINEER JAMES P. STROKE

PHASE 3
50 NEW HOMES AT KNOX LANDING
CAMP LEJEUNE NORTH CAROLINA

LEGEND, LIGHTING FIXTURE SCHEDULE & GENERAL NOTES

Project No: 10-003
Drawn: MJS
Checked: JPS
Approved: JPS
*Scale: NONE
*use graphic scales if sheet size varies from 22 x 34
SHEET 67 OF 72

E0.01

C:\Documents and Settings\Administrator\Local Settings\Temporary Internet Files\Content.IE5\JBMYSN9\10-21%20Knox%20Landing%20ELE%20100A[1].dwg May 18, 2011 - 9:27am

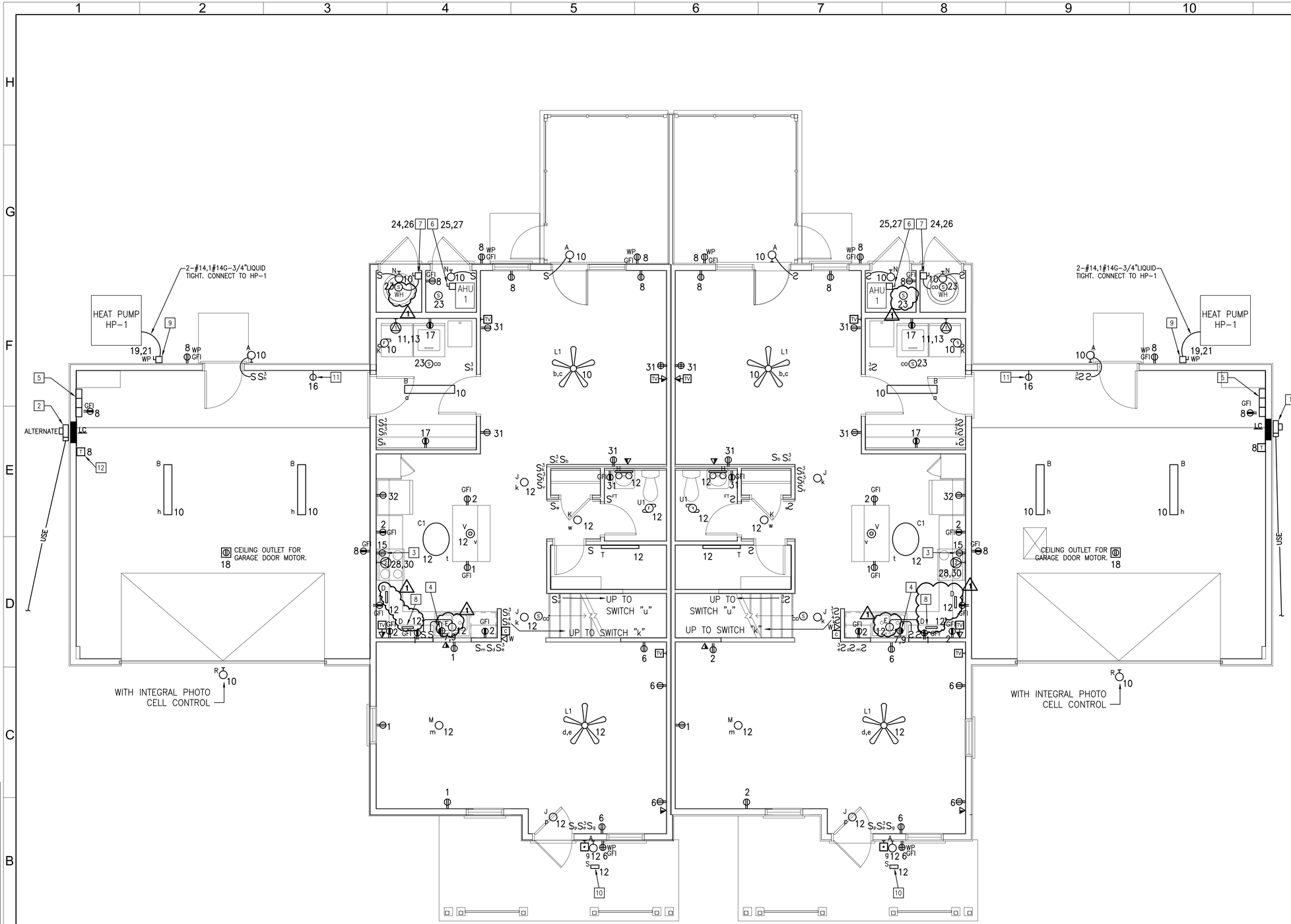

BT401 LOWER LEVEL
ELECTRICAL FLOOR PLAN
SCALE:1/4"=1'-0"

NOTES KEY

1. UTILITY SERVICE EQUIPMENT. COORDINATE WITH CIVIL SITE PLAN FOR PLACEMENT IN ACCORDANCE WITH TRANSFORMER LOCATION. REFER TO SHEET E2.01 FOR POWER ONE-LINE DIAGRAM.
2. ALTERNATE UTILITY SERVICE EQUIPMENT LOCATION. COORDINATE WITH CIVIL SITE PLAN FOR PLACEMENT IN ACCORDANCE WITH TRANSFORMER LOCATION.
3. RECEPTACLE OUTLET LOCATED IN CABINET OVER RANGE FOR MICROWAVE OVEN AND RANGE HOOD.
4. SPLIT YOKE DUPLEX RECEPTACLE SHARED BETWEEN DISH WASHER AND FOOD DISPOSAL. EACH WIRED ON A SEPARATE DEDICATED CIRCUIT WITH SEPARATE NEUTRAL CONDUCTORS.
5. STRUCTURED MULTIMEDIA CENTER PANEL AND OCCUPANT SUPPLIED MODEM. SEE SCHEMATIC DIAGRAM ON SHEET E2.01.
6. 60A-2P AC 240V MOLDED CASE DISCONNECT SWITCH, (EATON #DPB-222R) CONNECT TO AIR HANDLER UNIT. EXACT LOCATION TO BE DETERMINED IN THE FIELD. REFER TO EQUIPMENT SCHEDULE ON SHEET E3.01.
7. 30A-2P DISCONNECT SWITCH, CONNECT TO WATER HEATER. REFER TO EQUIPMENT SCHEDULE ON SHEET E3.01.
8. UNDER CABINET LIGHT FIXTURE SHALL BE HIDDEN WITHIN THE FRAMED BOX ON UNDERSIDE OF CABINET. DO NOT MOUNT ON CABINET FRAMES. (TYPICAL)
9. AIR CONDITIONER, 240V, MOLDED CASE 60A-2P SWITCH (EATON #DPB222R). VERIFY EXACT LOCATION OF AC WITH THE MC. PRIOR TO ROUGHING IN FOR SAME.
10. ADDRESS LIGHT MOUNTED BELOW "A" TYPE FIXTURE. REFER TO ARCHITECT'S ELEVATION DRAWINGS FOR EXACT LOCATION.
11. DEDICATED CIRCUIT: SINGLE 20A-125V RECEPTACLE FOR OCCUPANT FREEZER.
12. WIRE 24 VOLT DOOR CHIME, ADDRESS LIGHT AND ATTIC MOTORIZED DAMPER JUNCTION BOX (WIRING TO DAMPER UNDER DIVISION 150000) TO TRANSFORMER.
13. TERMINATE 2#14-24V CIRCUIT FROM GARAGE TRANSFORMER IN ATTIC JUNCTION BOX FOR MOTORIZED DAMPER CONNECTIONS UNDER DIVISION 150000. LEAVE 12" OF SLACK IN CONDUCTORS AND TAPE UP.

Atlantic COMMUNITIES
Marine Corps
A Forest Lakes Community

INCIDENT & INJURY FREE
SIN LESIÓN O ACCIDENTE

LIVE SAFE WORK SAFE
VIVA SEGURO TRABAJE SEGURO

Actus
Lend Lease

Date:	Issue:
2/8/2011	100% SUBMITTAL
5/17/2011	BULLITIN NO. 1

M.J.SUPRANOVICZ ASSOCIATES
CONSULTING ELECTRICAL ENGINEERS
29 DANDY ROAD T:(508)833-7559
SAGAMORE BEACH C:(978)835-0799
MA 02562 EMAIL: MJSAEE@AOL.COM

NORTH CAROLINA REGISTERED PE 5333 ENGINEER JAMES PROFESSIONAL

PHASE 3
50 NEW HOMES AT KNOX LANDING
CAMP LEJEUNE NORTH CAROLINA

BT 401 LOWER LEVEL ELECTRICAL PLAN

Project No:	10-003
Drawn:	MJS
Checked:	JPS
Approved:	JPS
*Scale:	NONE

*use graphic scales if sheet size varies from 22 x 34

SHEET 68 OF 72

E1.01

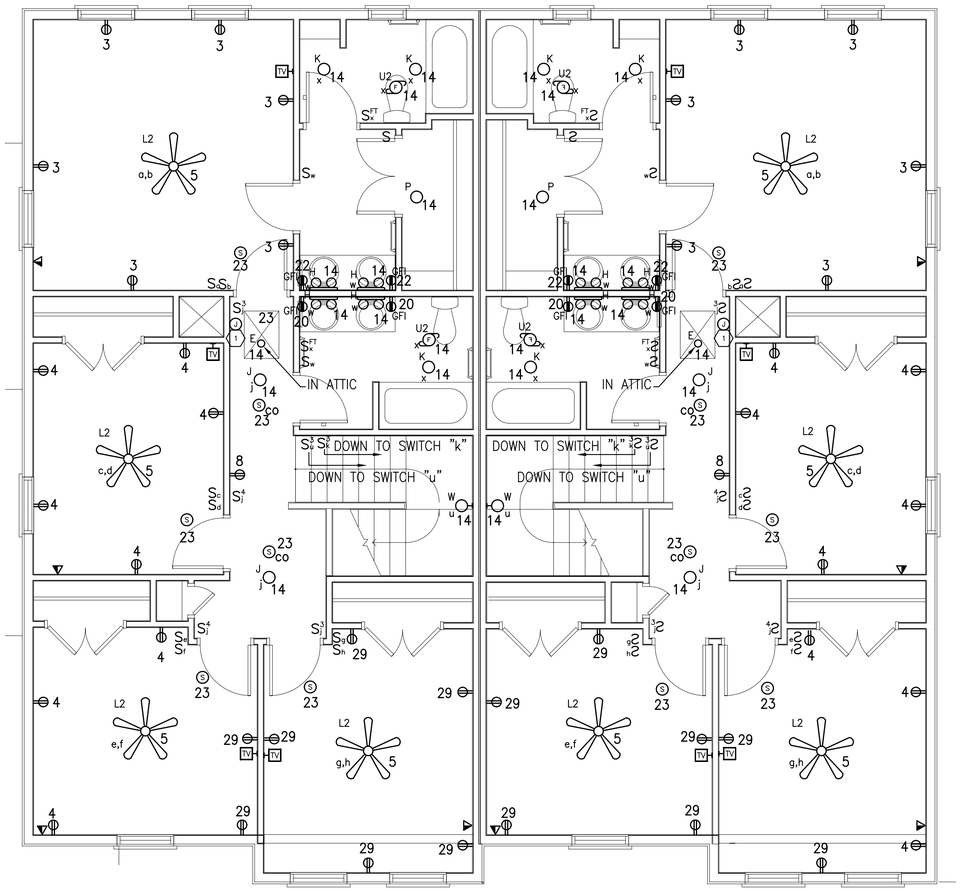

NOTES KEY

1. TERMINATE 2#14-24V CIRCUIT FROM GARAGE TRANSFORMER IN ATTIC JUNCTION BOX FOR MOTORIZED DAMPER CONNECTIONS UNDER DIVISION 150000. LEAVE 12" OF SLACK IN CONDUCTORS AND TAPE UP.

BT401 UPPER LEVEL
ELECTRICAL FLOOR PLAN
SCALE: 1/4"=1'-0"

Atlantic COMMUNITIES
Marine Corps
A Lend Lease Community

INCIDENT & INJURY FREE
SIN LESIÓN O ACCIDENTE

LIVE SAFE WORK SAFE | VIVA SEGURO TRABAJE SEGURO

Actus
Lend Lease

Date:	Issue:
Date:	Issue:
02-08-11	100% SUBMITTAL

M.J. SUPRANOVICZ ASSOCIATES
CONSULTING ELECTRICAL ENGINEERS
29 DIANDY ROAD
SAGAMORE BEACH
MA 02562
T:(508)833-7559
C:(978)835-0799
EMAIL: MJSAEE@AOL.COM

NORTH CAROLINA REGISTERED PE 5333 ENGINEER JAMES P. STROKE

PHASE 3
50 NEW HOMES AT KNOX LANDING
CAMP LEJEUNE NORTH CAROLINA

BT 401 UPPER LEVEL ELECTRICAL PLAN

Project No:	10-003
Drawn:	MJS
Checked:	JPS
Approved:	JPS
*Scale:	NONE

*use graphic scales if sheet size varies from 22 x 34

SHEET 69 OF 72

E1.02

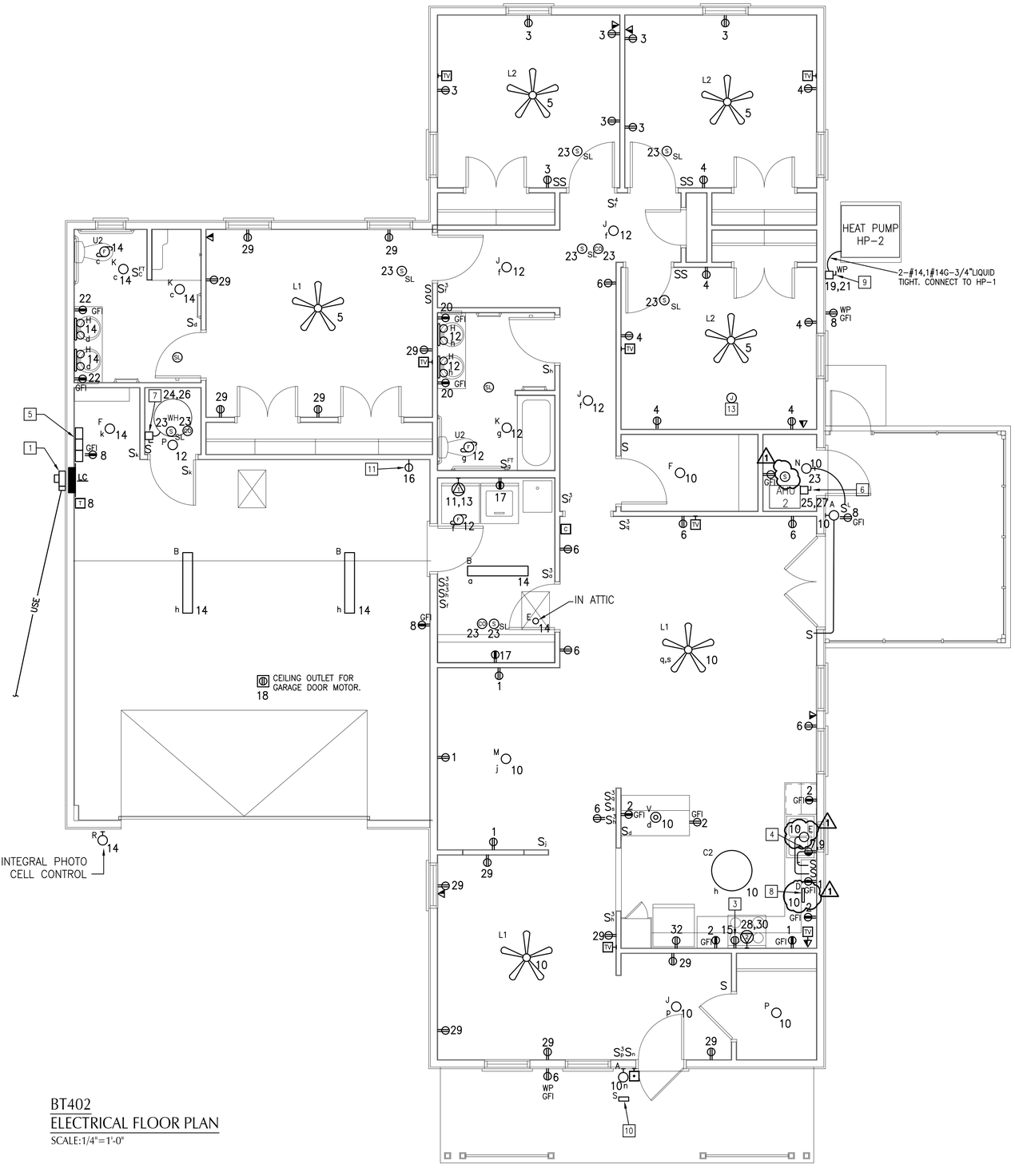

BT402
ELECTRICAL FLOOR PLAN
SCALE:1/4"=1'-0"

NOTES KEY

1. UTILITY SERVICE EQUIPMENT. COORDINATE WITH CIVIL SITE PLAN FOR PLACEMENT IN ACCORDANCE WITH TRANSFORMER LOCATION. REFER TO SHEET E2.01 FOR POWER ONE-LINE DIAGRAM.
2. ALTERNATE UTILITY SERVICE EQUIPMENT LOCATION. COORDINATE WITH CIVIL SITE PLAN FOR PLACEMENT IN ACCORDANCE WITH TRANSFORMER LOCATION.
3. RECEPTACLE OUTLET LOCATED IN CABINET OVER RANGE FOR MICROWAVE OVEN AND RANGE HOOD.
4. SPLIT YOKE DUPLEX RECEPTACLE SHARED BETWEEN DISH WASHER AND FOOD DISPOSAL. EACH WIRED ON A SEPARATE DEDICATED CIRCUIT WITH SEPARATE NEUTRAL CONDUCTORS.
5. STRUCTURED MULTIMEDIA CENTER PANEL AND OCCUPANT SUPPLIED MODEM. SEE SCHEMATIC DIAGRAM ON SHEET E2.01.
6. 60A-2P AC 240V MOLDED CASE DISCONNECT SWITCH, (EATON #DPB-222R) CONNECT TO AIR HANDLER UNIT. EXACT LOCATION TO BE DETERMINED IN THE FIELD. REFER TO EQUIPMENT SCHEDULE ON SHEET E3.01.
7. 30A-2P DISCONNECT SWITCH, CONNECT TO WATER HEATER. REFER TO EQUIPMENT SCHEDULE ON SHEET E3.01.
8. UNDER CABINET LIGHT FIXTURE SHALL BE HIDDEN WITHIN THE FRAMED BOX ON UNDERSIDE OF CABINET. DO NOT MOUNT ON CABINET FRAMES. (TYPICAL)
9. AIR CONDITIONER, 240V, MOLDED CASE 60A-2P SWITCH (EATON #DPB222R). VERIFY EXACT LOCATION OF AC WITH THE MC. PRIOR TO ROUGHING IN FOR SAME.
10. ADDRESS LIGHT MOUNTED BELOW "A" TYPE FIXTURE. REFER TO ARCHITECT'S ELEVATION DRAWINGS FOR EXACT LOCATION.
11. DEDICATED CIRCUIT: SINGLE 20A-125V RECEPTACLE FOR OCCUPANT FREEZER.
12. WIRE 24 VOLT DOOR CHIME, ADDRESS LIGHT AND ATTIC MOTORIZED DAMPER JUNCTION BOX (WIRING TO DAMPER UNDER DIVISION 150000) TO TRANSFORMER.
13. TERMINATE 2#14-24V CIRCUIT FROM GARAGE TRANSFORMER IN ATTIC JUNCTION BOX FOR MOTORIZED DAMPER CONNECTIONS UNDER DIVISION 150000. LEAVE 12" OF SLACK IN CONDUCTORS AND TAPE UP.

Atlantic COMMUNITIES
Marine Corps
A Lend Lease Community

INCIDENT & INJURY FREE
SIN LESIÓN O ACCIDENTE

LIVE SAFE WORK SAFE | VIVA SEGURO TRABAJE SEGURO

Actus
Lend Lease

Date:	Issue:
Date:	Issue:
2/8/2011	100% SUBMITTAL
5/17/2011	1 BULLTIN NO. 1

M.J. SUPRANOVICZ ASSOCIATES
CONSULTING ELECTRICAL ENGINEERS
29 DIANDY ROAD
SAGAMORE BEACH
MA 02562
T:(508)833-7559
C:(978)835-0799
EMAIL: MJSAE@AOL.COM

NORTH CAROLINA REGISTERED PE 5333 ENGINEER JAMES R. FORE

PHASE 3
50 NEW HOMES AT KNOX LANDING
CAMP LEJEUNE NORTH CAROLINA

BT 402 ELECTRICAL PLAN

Project No:	10-003
Drawn:	MJS
Checked:	JPS
Approved:	JPS
*Scale:	NONE

*use graphic scales if sheet size varies from 22 x 34

SHEET 70 OF 72

E1.03

LOCATION 3: DATA, TELEPHONE AND TELEVISION JACKS – REFER TO ELECTRICAL FLOOR PLANS.

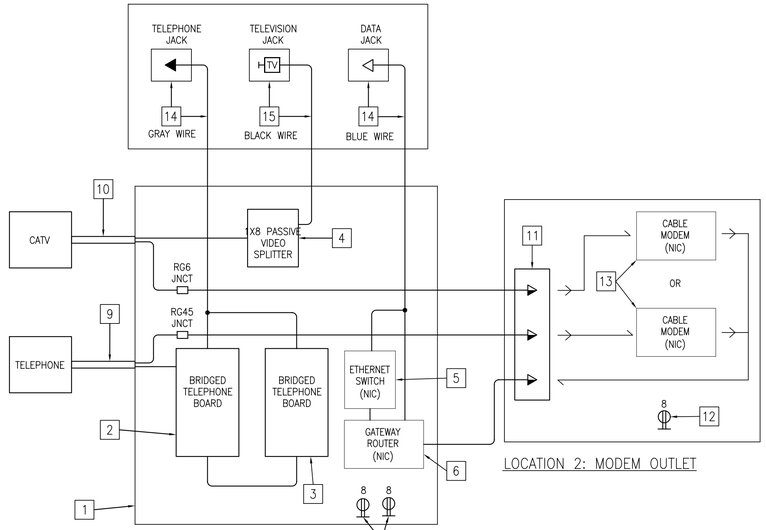

LOCATION 2: MODEM OUTLET

LOCATION 1: STRUCTURED MEDIA CENTER CABINET

COMMUNICATIONS SCHEMATIC DIAGRAM

1. STRUCTURED MEDIA CENTER ENCLOSURE AND FLUSH MOUNTED COVER – LEVITON MODEL #47605–14W (OR 47605–28W IF REQUIRED TO ACCOMMODATE COMPONENTS SPECIFIED); PROVIDE PLASTIC MOUNTING BRACKETS SIMILAR TO LEVITON #s 41612–SBK, 47612–EBK, 47612–DBK AS REQUIRED TO ACCOMMODATE COMPONENTS SPECIFIED.
2. BRIDGED TELEPHONE BOARD – LEVITON #47603–110 OR EQUAL
3. PROVIDE DAISY CHAINED ADDITIONAL BRIDGED TELEPHONE BOARD AS REQUIRED – SEE ELECTRICAL FLOOR PLANS. LEVITON #47603–110 OR EQUAL.
4. 1X8 PASSIVE VIDEO SPLITTER – LEVITON #47690–8C OR EQUAL.
5. ETHER NET SWITCH WITHIN STRUCTURED MEDIA CENTER NOT IN CONTRACT (NIC) – OCCUPANT PROVIDED. LEVITON #47611–5PT OR 47611–8PT OR EQUAL AS REQUIRED BY NUMBER OF DATA OUTLETS – REFER TO FLOOR PLANS.
6. GATEWAY ROUTER WITHIN STRUCTURED MEDIA CENTER "NIC", OCCUPANT PROVIDED – LEVITON # 47611–GT4 OR EQUAL.
7. TWO DUPLEX RECEPTACLES WITHIN STRUCTURED MEDIA CENTER. WIRE TO SAME CIRCUIT AS MODEM RECEPTACLE. LEVITON #47605–NDP OR EQUAL.
8. EXTERIOR COMMUNICATIONS BOXES PROVIDED BY INDIVIDUAL UTILITIES COMPANY. CATV TO PROVIDE TWO WAY SPLITTER, TELEPHONE COMPANY TO PROVIDE DEMARCATION TERMINAL.
9. INSTALL 1"ENT AND 2 CAT 5E CABLES.
10. INSTALL 1" ENT AND 2 RG–6 CABLES PER CATV COMPANY SPECIFICATIONS.
11. MODEM OUTLET: ONE WALL PLAQUE ADJACENT TO DUPLEX RECEPTACLE, CONSISTS OF ONE OUTPUT DATA JACK, IVORY COLOR (LABEL "TO MODEM"), ONE OUTPUT VIDEO JACK (LABEL "TO MODEM") AND ONE DATA INPUT JACK, BLUE COLOR (LABEL "FROM MODEM").
12. DUPLEX RECEPTACLE FOR MODEM – LOCATE SLIGHTLY ABOVE MODEM MOUNTING HEIGHT, SEE ARCHITECTURAL DRAWINGS.
13. OCCUPANT PROVIDED MODEM
14. TELEPHONE AND DATA OUTLETS TO BE WIRED WITH 1–CAT 5E CABLE WITH LEVITON 8 CONDUCTOR SNAP JACK OR EQUAL – LEVITON #41108–R15, (I=IVORY) FOR TELEPHONE AND #41108–RL5, (L=BLUE) FOR DATA.
15. RG–6, QUADSHIELD CAT V 5C CATV CABLE PER CATV COMPANY SPECIFICATIONS. INSTALL CATV OUTLET WITH STYLE "F" CONNECTORS.

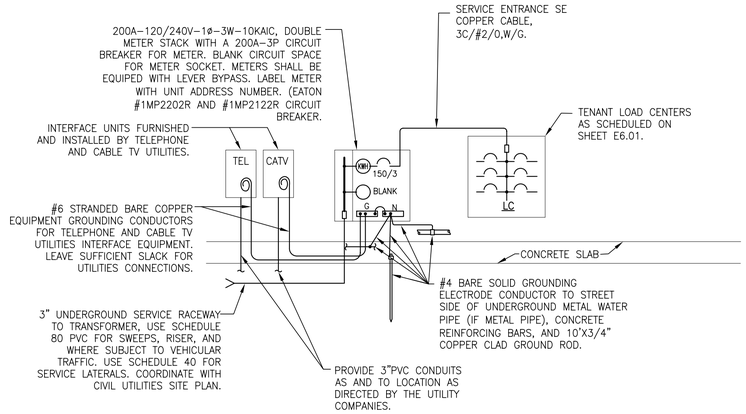

BT 402 POWER ONE LINE DIAGRAM

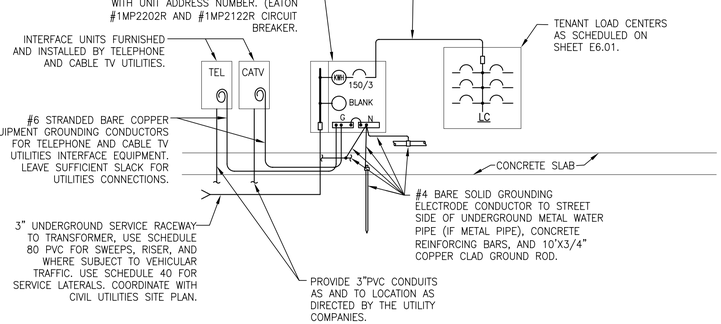

BT 402 POWER ONE LINE DIAGRAM

Atlantic COMMUNITIES
Marine Corps
A Lend Lease Community

INCIDENT & INJURY FREE
SIN LESIÓN O ACCIDENTE

LIVE SAFE WORK SAFE
VIVA SEGURO TRABAJE SEGURO

Actus
Lend Lease

	Issue:	Date:
100% SUBMITTAL		02–08–11

M.J. SUPRANOVICZ ASSOCIATES
CONSULTING ELECTRICAL ENGINEERS
29 DIANDY ROAD T:(508)833–7559
CANDLEWOOD BEACH C:(978)835–0799
MA 02562 EMAIL: MJSAEE@AOL.COM

NORTH CAROLINA REGISTERED PE 5333 ENGINEER JAMES P. SUPRANOVICZ

PHASE 3
50 NEW HOMES AT KNOX LANDING
CAMP LEJEUNE NORTH CAROLINA

ELECTRICAL RISER DIAGRAMS

Project No:	10-003
Drawn:	MJS
Checked:	JPS
Approved:	JPS
*Scale:	NONE

*use graphic scales if sheet size varies from 22 x 34

SHEET 71 OF 72

E2.0

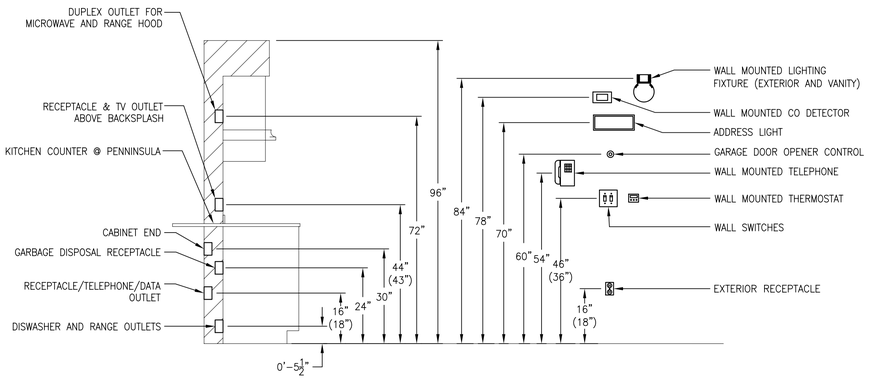

1 MOUNTING HEIGHT DETAIL
N.T.S.

NOTES:
1. HEIGHTS IN PARENTHESIS ARE FOR ADAPTABLE UNITS, IF NO ALTERNATE PARENTHESIS IS SHOWN, HEIGHT SHALL BE FOR BOTH ADAPTABLE AND STANDARD UNITS.
2. RECEPTACLES IN GARAGES SHALL BE LOCATED 36" TO 42" ABOVE FINISHED FLOOR.
3. TELEPHONE OUTLETS SHALL BE MOUNTE 18" AFF WITH THE EXCEPTION OF KITCHEN WALL MOUNTED AT 54".
4. G.F.C.I. RECEPTACLES IN BATHS AND TOILETS SHALL BE MOUNTED AT 37" AFF.
5. ALL DIMENSIONS ARE TO CENTERLINE OF DEVICES.

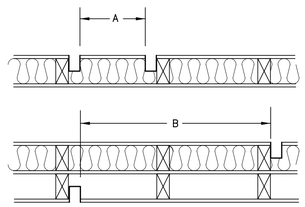

2 PARTY WALL OUTLET DETAIL
N.T.S.

MEMBRANE PENETRATION NOTES (PER IRC 2009 – R321.3.2), STEEL ELECTRICAL BOXES THAT DO NOT EXCEED 16 SQUARE INCHES IN AREA, PROVIDED THAT THE TOTAL AREA OF SUCH OPENINGS DOES NOT EXCEED 100 SQUARE INCHES FOR ANY SQUARE FOOT OF WALL AREA MAY PENETRATE A FIRE RESISTIVE MEMBRANE.
A. NO MINIMUM SPACING REQUIRED, PROVIDED THAT THE CONDITIONS ABOVE ARE MET.

B. ELECTRICAL BOXES ON OPPOSITE SIDES OF THE WALL MUST BE SEPARATED BY A MINIMUM OF 24 INCHES. NOTE: THE USE OF TESTED PRPRIETARY PRODUCTS SUCH AS "SPEC-SEAL PUTTY PADS" MAY ALLOW FOR REDUCTIONS IN THE 24 INCH MINIMUM WHEN INSTALLED PER PER MANUFACTURER'S RECOMMENDATIONS BUT DOES NOT ALLOW FOR BOXES TO BE INSTALLED BACK-TO-BACK: THE CONTRACTOR SHALL PROVIDE MANUFACTURER'S LITERATURE AND TEST DATA WITH HIS SUBMITTALS FOR APPROVAL.

BT401 LOAD CENTER LC, 150 AMP, 120/240 VOLT, 1ø, 3W
INTERRUPTING CAPACITY 10K AMPS RMS SYM 150A MLO FLUSH MOUNTED

NOTES	LOAD DESCRIPTION	CB/ PHASE	CIRC. NO.	ø	CIRC. NO.	CB/ PHASE	LOAD DESCRIPTION	NOTES
1,4,11	SMALL APPLIANCE RECEPTACLE CIRCUIT	*20/1	1	A	2	20/1	SMALL APPLIANCE RECEPTACLE CIRCUIT	1,4
1,4	BEDROOM RECEPTACLES	*20/1	3	B	4	*20/1	BEDROOM RECEPTACLES	1,4
1,4	BEDROOM LIGHTS	*15/1	5	A	6	*20/1	CONVENIENCE OUTLETS	1,4
9,10	GARBAGE DISPOSAL	↑20/1	7	B	8	*20/1	CONVENIENCE OUTLETS	1,4
	DISHWASHER	↓20/1	9	A	10	*15/1	LIGHTING	1,4
2,10	CLOTHES DRYER	*30/2	11	B	12	*15/1	LIGHTING	1,4
			13	A	14	*20/1	CONVENIENCE OUTLETS	1,4
10	RANGE HOOD & MICROWAVE OVEN	20/1	15	B	16	*20/1	FREEZER	1,4,10
10	CLOTHES WASHER	*20/1	17	A	18	*20/1	GARAGE DOOR OPENER RECEPTACLE	1,4,10
3,10	AIR CONDITIONER	–/2	19	B	20	*20/1	BATHROOM RECEPTACLES	1,4,10
			21	A	22	*20/1	MASTER BATHROOM RECEPTACLES	1,4,10
10	SMOKE AND CO DETECTORS	*20/1	23	B	24	30/2	WATER HEATER	6,10
8,10	AIR HANDLING UNIT	–/2	25	A	26			
			27	B	28	40/2	ELECTRIC RANGE	7,10
1,4	BEDROOM RECEPTACLES	*20/1	29	A	30			
1,4,10	TOILET RECEPTACLE	*20/1	31	B	32	20/1	REFRIGERATOR	10
–	SPACE	/1	33	A	34	/1	SPACE	–
–	SPACE	/1	35	B	36	/1	SPACE	–
–	SPACE	/1	37	A	38	/1	SPACE	–
–	SPACE	/1	39	B	40	/1	SPACE	–

* DENOTES COMBINATION ARC FAULT TYPE CIRCUIT BREAKER.

BT402 LOAD CENTER LC, 150 AMP, 120/240 VOLT, 1ø, 3W
INTERRUPTING CAPACITY 10K AMPS RMS SYM 150A MLO FLUSH MOUNTED

NOTES	LOAD DESCRIPTION	CB/ PHASE	CIRC. NO.	ø	CIRC. NO.	CB/ PHASE	LOAD DESCRIPTION	NOTES
1,4,11	SMALL APPLIANCE RECEPTACLES CIRCUIT	*20/1	1	A	2	20/1	SMALL APPLIANCE RECEPTACLE CIRCUIT	1,4
1,4	BEDROOM RECEPTACLES	*20/1	3	B	4	*20/1	BEDROOM RECEPTACLES	1,4
1,4	BEDROOM LIGHTS	*15/1	5	A	6	*20/1	CONVENIENCE OUTLETS	1,4
9,10	GARBAGE DISPOSAL	↑20/1	7	B	8	*20/1	CONVENIENCE OUTLETS	1,4
	DISHWASHER	↓20/1	9	A	10	*15/1	LIGHTING	1,4
2,10	CLOTHES DRYER	*30/2	11	B	12	*15/1	LIGHTING	1,4
			13	A	14	*15/1	LIGHTING	1,4
10	RANGE HOOD & MICROWAVE OVEN	20/1	15	B	16	*20/1	FREEZER	1,4,10
10	CLOTHES WASHER	*20/1	17	A	18	*20/1	GARAGE DOOR OPENER RECEPTACLE	1,4,10
3,10	AIR CONDITIONER	–/2	19	B	20	*20/1	BATHROOM RECEPTACLES	1,4,10
			21	A	22	*20/1	MASTER BATHROOM RECEPTACLES	1,4,10
10	SMOKE AND CO DETECTORS	*20/1	23	B	24	30/2	WATER HEATER	6,10
8,10	AIR HANDLING UNIT	–/2	25	A	26			
			27	B	28	40/2	ELECTRIC RANGE	7,10
1,4	CONVENIENCE OUTLETS	*20/1	29	A	30			
–	SPACE	/1	31	B	32	20/1	REFRIGERATOR	10
–	SPACE	/1	33	A	34	/1	SPACE	–
–	SPACE	/1	35	B	36	/1	SPACE	–
–	SPACE	/1	37	A	38	/1	SPACE	–
–	SPACE	/1	39	B	40	/1	SPACE	–

* DENOTES COMBINATION ARC FAULT TYPE CIRCUIT BREAKER.

NOTES TO LOAD CENTERS:
1. LIGHTING AND RECEPTACLES SHALL BE ON SEPARATE CIRCUITS.
2. CLOTHES DRYER BRANCH CIRCUIT 11,13 SHALL BE #10 CU.
3. HEAT PUMP BRANCH CIRCUIT 19,21 SHALL BE SIZED PER MANUFACTURERS MCA RATING. SEE EQUIPMENT SCHEDULE.
4. 20 AMP CONVENIENCE OUTLET BRANCH CIRCUIT SIZE SHALL BE #12 AWG COPPER MINIMUM AND 15 AMP LIGHTING BRANCH CIRCUITS SHALL BE #14 AWG COPPER MINIMUM.
5. LOAD CENTER FEEDER SHALL BE #1 CU SER CABLE MINIMUM.
6. ELECTRIC WATER HEATER BRANCH CIRCUIT 24,26 SHALL BE #10 AWG CU MINIMUM.
7. ELECTRIC RANGE BRANCH CIRCUIT 28,30 SHALL BE #6 AWG CU.
8. REFER TO EQUIPMENT SCHEDULE FOR AIR HANDLER CIRCUIT BREAKER AND FEEDER SIZE.
9. SPLIT YOKE RECEPTACLE CIRCUIT BREAKERS SHALL HAVE HANDLE TIE BAR ACROSS THE TWO CB HANDELS SO BOTH BREAKERS TRIP IF ANY ONE IS TRIPPED.
10. DEDICATED CIRCUIT FOR LOAD INDICATED.
11. HOMERUN FOR SMALL APPLIANCE CIRCUIT #1 SHALL BE FROM DINNING ROOM RECEPTACLES BEFORE CONTIUING TO KITCHEN cfi RECEPTACLES.

EQUIPMENT SCHEDULE

BUILDING TYPE	TAG	EQUIPMENT DESCRIPTION	MOTOR RATING					SUPPLIMENTAL ELECTRIC HEAT (KW)	OCP MAX.	BRANCH	NOTES
			HP	KVA	VOLTS	AMPS	ø				
BT-401	AHU-1	AIR HANDLING UNIT	1/3	–	240	3.6	1	4.8	30/2	2-#10,1#10G	-
BT-402	AHU-2	AIR HANDLING UNIT	1/3	–	240	3.6	1	7.7	40/2	2-#8,1#8G	-
BT-401	HP-1	HEAT PUMP	–	–	240	12	1	–	30/2	2-#12, 1#12G	
BT-402	HP-2	HEAT PUMP	–	–	240	13.6	1	–	35/2	2-#12, 1#12G	

Atlantic COMMUNITIES
Marine Corps
A Lend Lease Community

INCIDENT & INJURY FREE
SIN LESIÓN O ACCIDENTE
LIVE SAFE WORK SAFE
VIVA SEGURO TRABAJE SEGURO

Actus
Lend Lease

Date:	Issue:	
		02-08-11
		100% SUBMITTAL

M.J. SUPRANOVICZ ASSOCIATES
CONSULTING ELECTRICAL ENGINEERS
29 DIANDY ROAD
SAGAMORE BEACH
MA 02562
T:(508)833-7559
C:(978)835-0799
EMAIL - MJSAEE@AOL.COM

NORTH CAROLINA REGISTERED PE 5333 ENGINEER JAMES P. JOHNSON

PHASE 3
50 NEW HOMES AT KNOX LANDING
CAMP LEJEUNE NORTH CAROLINA

SCHEDULES AND DETAILS

Project No: 10-003
Drawn: MJS
Checked: JPS
Approved: JPS
*Scale: NONE
*use graphic scales if sheet size varies from 22 x 34

SHEET 72 OF 72

E3.0